AGENDA
CITY COUNCIL
REGULAR MEETING
CITY OF WYOMING, MINNESOTA
JANUARY 4, 2022
7:00 PM

CALL TO ORDER:

CALL OF ROLL:

DETERMINATION OF A QUORUM:

PLEDGE OF ALLEGIANCE:

ANNUAL MEETING

1. Designate Official Newspaper for 2022 – Forest Lake Times – **Resolution 22-01-01**

2. Designate Official Depository for City Funds for 2022 **– Resolution 22-01-02**

3. Designate Electronic Fund Transfers and Payment for Claims - **Resolution 22-01-03**

4. Elect an Acting Mayor to serve in absence of Mayor during 2022 – (Minn. Stat. 412.121)

5. Review Council Appointments to Boards, Commissions, Committees and Board of Trustees of Fire Department Volunteer Relief Association **– Resolution 22-01-04**

6. Establishing 2022 regular meeting nights of the City Council of the City of Wyoming and Budget Calendar for 2023 Budget

7. Set Annual Fees for City Services for 2022 **– Resolution 22-01-05**

OPEN FORUM:
"An opportunity for members of the public to address the City Council on items on/or not on the current agenda. Items requiring Council action maybe deferred to staff or Boards and Commissions for research and future Council Agendas if appropriate. You will be limited to three (3) minutes and we ask that you conduct yourself in a professional, courteous manner, and refrain from the use of profanity. Failure to abide by this policy may result in the loss of your privilege to speak".

APPROVAL OF MINUTES:

8. Consider approving the minutes of the "Regular Meeting" of the Wyoming, Minnesota city Council for December 21, 2021

SCHEDULED BID LETTINGS:

SCHEDULED PUBLIC HEARINGS:

CONSENT AGENDA:

Items under the "Consent Agenda" will be adopted with one motion; however, council members may request individual items to be pulled from the consent agenda for discussion and action if they choose.

9. Consider authorizing the payment of recommended bills, payroll and journal entries for the period of December 21, 2021 through January 4, 2022

10. To consider **Resolution 22-01-06** a resolution declaring a certain vehicle as surplus property for disposal and authorizing the police department to dispose of a vehicle through online auction

11. To consider **Resolution 22-01-07** a resolution accepting a donation to the Wyoming Fire Depatment from Maranatha Church

12. To consider approving Public Safety Director, Neil Bauer for a city credit card per the credit card policy

13. To consider the resignation of Barb Williams from the Park Advisory Commission

ACKNOWLEDGE RECEIPT OF REPORTS OF OFFICERS, BOARDS, COMMISSIONS AND DEPARTMENT HEADS:

14. Report of the Public Safety Director, Neil Bauer, for December 28, 2021

15. Report of City Building Official, Fred Weck, IV for December 29, 2021

16. Report of the City Attorney, Tom Loonan, for December 29, 2021

17. Report of City Engineer Mark Erichson, WSB for December 30, 2021

18. Report of the Public Works Superintendent Chuck Almhjeld for December 29, 2021

COMMUNICATIONS:

19. East Viking Blvd Improvement Project Open House and Public Hearing Letter Notice

20. Swenson Park Ribbon Cutting January 15, 2021 2:00PM

OLD BUSINESS:

NEW BUSINESS:

21. To consider **Resolution 22-01-08** a resolution approving the Preliminary Plat: D-21-010 "Re-Plat of Diamond Ridge by Beckman Custom Homes, LLC - Charles Beckman located at Property ID Numbers: 21.00040.01 - 21.00040.06

22. To consider **Resolution 22-01-09** a resolution authorizing the purchase of three Ford Utility Interceptor SUV Vehicles for a total amount of $142,735.14

23. To consider **Resolution 22-01-10** a resolution approving Wold Architecture to complete design development for a public safety facility in the amount of $171,000

COUNCIL REPORTS:

ADJOURN

FOREST LAKE TIMES

APG
EAST CENTRAL MINNESOTA

234 South Main Street, Cambridge, MN 55008 -763-691-6001 publicnotice@apgecm.com

December 3, 2021

Robb Linwood
City of Wyoming
P.O. Box 188
Wyoming, MN 55092

Dear Mr. Linwood and City Council Members,

The **Forest Lake Times** would like to bid for legal printing status as the designated Official Newspaper for the City of Wyoming. The **Forest Lake Times** is qualified by the State of Minnesota as a Legal Newspaper under Minnesota Statutes Section 331 A.02, subdivision 1.

The bid to publish legal notices in the **Forest Lake Times** for the year 2022 will remain unchanged from the 2021 rate of $5.60 per column inch with 7 point type and 9 lines per inch, the same rate **as** the current contract. The notices will also be placed in the St. Croix Valley Peach at no additional charge. The notices will be posted on our website, www.forestlaketimes.com for all to view for free and at no charge to the city.

We would prefer legal notices emailed to publicnotice@apgecm.com. For notices that are faxed or mailed to us, we will add a $20 typesetting charge. The deadline is 3:00p.m. Monday for the same weeks publication except on holiday weeks where there are early deadlines. One affidavit will be provided to you at no cost and additional affidavits are available for $2.50 each.

We appreciate the longstanding relationship the **Forest Lake Times** has had with the City of Wyoming and we look forward to continuing to serve the residents of Wyoming.

Sincerely,

Tonya Orbeck

Tonya Orbeck

Public Notice Department Manager
ECM Publishers, Inc. /Adams Publishing Group

RESOLUTION NO. 22-01-01

A RESOLUTION DESIGNATING THE FOREST LAKE TIMES THE OFFICIAL NEWSPAPER FOR THE CITY OF WYOMING FOR THE YEAR 2022

WHEREAS, in accordance with **Minnesota State Statute 412.831** the City of Wyoming is required to designate a newspaper of general circulation as its official newspaper; and

WHEREAS, the designated newspaper is where the City will publish ordinances and other matters as required by law; and

WHEREAS, the City Council of the City of Wyoming desires to designate the official newspaper for the City.

NOW, THEREFORE, BE IT RESOLVED the Wyoming City Council hereby designates the **Forest Lake Times** as the official newspaper for the City of Wyoming for the calendar year 2022 or until such time as a new official newspaper is duly designated.

ADOPTED BY THE CITY COUNCIL OF THE CITY OF WYOMING THIS 4th DAY OF JANUARY, 2022.

CITY OF WYOMING

By:_____
Lisa Iverson, Mayor

ATTEST:

_____
Robb Linwood, City Administrator/Clerk

RESOLUTION NO. 22-01-02

A RESOLUTION DESIGNATING THE OFFICIAL DEPOSITORIES FOR THE CITY OF WYOMING FOR THE CALENDAR YEAR 2022

WHEREAS, in accordance with **Minnesota State Statute 427.01-.12** the City of Wyoming is required to designate an official depository; and

WHEREAS, the designated official depository is where the City of Wyoming will conduct its banking; and

WHEREAS, the City Council of the City of Wyoming desires to designate the official depositories for the City.

NOW, THEREFORE, BE IT RESOLVED the Wyoming City Council hereby designates the following as the official depositories for the City of Wyoming until such time as a new official depository is duly designated:

First State Bank of Wyoming – Wyoming, Minnesota
Prudent Man Advisors (PMA)
RBC Wealth Management/Dain Rauscher
4M Fund

ADOPTED BY THE CITY COUNCIL OF THE CITY OF WYOMING THIS 4th DAY OF JANUARY, 2022.

CITY OF WYOMING

By:_____
Lisa Iverson, Mayor

ATTEST:

_____
Robb Linwood, City Administrator/Clerk

Request for Council Action

Date: December 28, 2021

Presented to: Mayor Iverson and City Council Members
Presented by: Robb Linwood, City Administrator
Department: Administration
Reference: Electronic Fund Transfer Approval
Method: Annual Meeting

***Background Information*:**

The city's auditor has requested for best practice that we annually adopt an Electronic Fund Transfer and Payment of Claims resolution. The purpose of the resolution is to give the City Administrator authorization to pay or transfer funds electronically prior to approval by the city council. If the transfers were completed prior to council approval they still need to be put on the claims register for council review at the next regular city council meeting. One example of this would be for annual bond payments for outstanding debt. In this situation we wait until the last day for the payable in order to keep those large amounts of dollars in city accounts invested and earning until we absolutely have to pull them out. Secondly, we have had in the last few years received dollars from both the CARES Act and the American Rescue Fund. In both of these instances the funds were transferred to an account where the city could start earning until it was authorized for expenditure by the city council. If approved a copy of the resolution will be kept on hand for the auditors and sent to the dispersing financial intuition for record.

Recommendation: To approve a resolution delegating authority to make electronic funds transfers and payment of claims prior to board approval to the city administrator and their designees for 2022

CITY OF WYOMING
P.O. Box 188, 26885 Forest Blvd., Wyoming, MN 55092
Phone: 651-462-0575 Fax: 651-462-0576

RESOLUTION NO. 22-01-03

CITY OF WYOMING
CHISAGO COUNTY, MINNESOTA

A RESOLUTION DELEGATING AUTHORITY TO MAKE ELECTRONIC FUNDS TRANSFERS AND PAYMENT OF CLAIMS PRIOR TO BOARD APPROVAL TO THE CITY ADMINISTRATOR AND THEIR DESIGNEES FOR 2022

WHEREAS, Minnesota Statute 471.38 Subd. 3a. requires the City Council annually delegate authority to make electronic funds transfers; and

WHEREAS, the City uses electronic funds transfers whenever possible as they are much more efficient and eliminates the risk of lost or mishandled check payments; and

WHEREAS, all electronic funds transfers are subject to:

1. Annual City Council designation of authority to the City Administrator and their designee.
2. Certified copy of designation to be kept with disbursing bank.
3. The City's internal control procedures.
4. A list of all electronic transactions to be submitted for approval to City Council at its next regular meeting.

NOW THEREFORE, BE IT RESOLVED THAT authority to make electronic funds transfers and payment of claims prior to board approval shall be delegated to City Administrator and their designee.

ADOPTED BY THE CITY COUNCIL OF THE CITY OF WYOMING THIS 4th Day of January, 2022

CITY OF WYOMING

By: _____
Lisa Iverson, Mayor

ATTESTED:

_____
Robb Linwood, City Administrator/Clerk

Request for Council Action

Date: December 28, 2021

Presented to: Mayor Iverson and City Council Members
Presented by: City Administrator Linwood
Department: Administration
Reference: Annual Meeting Item
Method: Annual Meeting

***Background Information*:** It is necessary per state statute to elect an Acting Mayor to serve in absence of Mayor during 2022 – (Minn. Stat. 412.121)

Request: To make a motion an elect a council member to the position of acting mayor for the City of Wyoming in 2022.

CITY OF WYOMING
P.O. Box 188, 26885 Forest Blvd., Wyoming, MN 55092
Phone: 651-462-0575 Fax: 651-462-0576

RESOLUTION NO. 22-01-04

A RESOLUTION MAKING APPOINTMENTS TO BOARDS AND COMMISSIONS COMMITTEES AND BOARD OF TRUSTEES OF FIRE DEPARTMENT VOLUNTEER RELIEF ASSOCIATION – FOR 2022

WHEREAS, the Wyoming City Council is required to make various appointments to Boards and Commissions for purposes of conducting City business.

WHEREAS, The Wyoming City Council shall ratify the appointments made based on the recommendations received according to the bylaws of the various Boards and Commissions for purposes of representing the City Council and its policies.

NOW, THEREFORE, BE IT RESOLVED, the Wyoming City Council appointments to various Boards, and as shown in the attached **"Exhibit A"** for calendar year 2022.

ADOPTED BY THE CITY COUNCIL OF THE CITY OF WYOMING THIS 4th DAY OF JANUARY, 2022.

CITY OF WYOMING

By:_____
Lisa Iverson, Mayor

ATTEST:

_____
Robb Linwood, City Administrator/Clerk

Exhibit A

Acting Mayor	Claire Luger
Sewer Commissioner	Linda Nanko Yeager
Sewer Commissioner	Lisa Iverson
Sewer Commissioner Alternate	Claire Luger
EDA Member	Lisa Iverson
EDA Member	Dennis Schilling
Planning Commission Liaison	Brett Ohnstad
Watershed District Representative	OPEN
Park Advisory Commission	Claire Luger
Fire Relief Association	Lisa Iverson
Fire Relief Association	Robb Linwood
Fire Relief Association	Jesse Milligan
Emergency Services Officer	Neil Bauer
Highway 8 Task Force	Lisa Iverson
Joint Park/Planning Commission	Claire Luger

Planning Commission

Katie West

Park and Recreation Board

None

EDA

Eddie Prigge

December 28, 2021

Good afternoon Fred and Robb,

I have enjoyed serving on the Planning Commission for Wyoming since January 2019, it is crazy how quickly time has flown by! I would love to keep my seat on the commission, as I believe I have a lot to offer and love contributing to our community!! Since moving to Wyoming in 2017, my family has grown by 3 lovely children, my most recent addition was 4 weeks ago, we have attended almost all, if not all community events, and try to shop locally whenever possible. Wyoming is such a special place, and I look forward to many more years here!

Please consider allowing me to maintain my current seat.

Best,

Katie West

December 29, 2021

Robb

I am very much interested in being reappointed to the board as a result of my seats 6 years expiry date. Let me know if you need anything else from me.

Eddie Prigge
REALTOR®, RE/MAX Signature Properties

Request for Council Action

Date: December 28, 2021

Presented to: Mayor Iverson and City Council Members
Presented by: Robb Linwood, City Administrator
Department: Administration
Reference: 2022 Regular Meeting Dates City Council
Method: Annual Meeting

Listed below are the proposed 2022 City Council meeting dates starting at 7:00pm. The meetings are the first and third Tuesday of each month except for those months where it is required for Election purposes or the meeting date falls on a Holiday in which case the regular meeting will be held the following day.

The bolded dates are meetings that have been scheduled for Wednesday due to a city event, caucus or election that fall on a regular meeting date;

January 4, 2022	May 3, 2022	September 6, 2022
January 18, 2022	May 17, 2022	September 20, 2022
February 2, 2022	June 7, 2022	October 4, 2022
February 15, 2022	June 21, 2022	October 18, 2022
March 1, 2022	July 5, 2022	November 1, 2022
March 15, 2022	July 19, 2022	November 15, 2022
April 5, 2022	**August 3, 2022**	December 6, 2022
April 19, 2022	August 16, 2022	December 20, 2022

*February 1, 2022 Caucuses
*August 2, 2022 National Night Out

CITY OF WYOMING
P.O. Box 188, 26885 Forest Blvd., Wyoming, MN 55092
Phone: 651-462-0575 Fax: 651-462-0576

City of Wyoming 2023 Budget Process

One of the most important activities undertaken each year by the City is the budget process. The quality of decisions made in the budget process conveys the City's long-range plans and policies for current and future services.

The budget is a financial, planning, and policy document which reflects the allocation of limited revenue among competing uses and serves as a guide for the various departments in implementing their goals and objectives.

Annual budgets are adopted for the General, Capital Projects, Debt Service, and Proprietary Funds. Within the General fund, budgets are prepared for each major department. For example, Administration, Public Safety and Public Works are departments within the General fund.

Budgeted amounts are reported as originally adopted. Budgeted expenditure appropriations lapse at year-end. The City's department heads may make transfers of appropriations within their department. The budgetary level of control is at the department level.

The budget process is a year-round activity because regular reporting is necessary to provide accountability, understanding, and confidence in the City. The City provides different types of reporting to facilitate this process. These reports include: monthly department reports, monthly capital project reports, monthly cash balances reports, budget document, and an audited comprehensive annual financial statement.

The City follows the procedures below in establishing the budget:

The annual budget process begins in May or June of each year. Staff prepares and distributes budget worksheets and instructions for department heads. City Council has a work session to review the budget process. Departmental budgets and 5-year capital requests are due from department heads to the City Administrator. The first draft of the budget is due to the City Administrator at the beginning of July. The City Administrator meets with department heads to discuss individual budget requests. Total budget requests are compared to revenue estimates to ensure that there is funding available to fund the proposed expenditures. Budget revisions from departmental meetings are completed and revisions are incorporated into the first draft of the budget that is presented at the council work session. The City Administrator meets with department heads to discuss and review council feedback from the work session. In early September, the City sets the preliminary levy and the public hearing information which is forwarded to the County Auditor by September 30th each year. In September/October, additional updates are completed before the final presentation of the budget. The County mails parcel specific tax notices in November to property owners providing taxes due the following year based on the preliminary levy. A budget and levy hearing is held in December in accordance with State law. The budget and tax levy are adopted through passage of resolutions.

Budget Calendar

May 17, 2022	City Council holds visioning sessions with City Administrator to review long-term plan and adopt short-term strategies and budget objectives.
June 1, 2022	Staff prepares and distributes budget worksheets and instructions for department heads.
June 8, 2022	City Council holds visioning sessions with City Administrator, Department heads to look at long-term plan and adopt short-term strategies and budget objectives.
June 17, 2022	Departmental budgets and 5-year capital requests due from department heads to City Administrator
July 6, 2022	1st draft of budget due to City Administrator.
July 5-8, 2022	Meet with department heads to discuss individual budget requests.
July 15, 2022	Budget revisions from departmental meetings completed.
July 27, 2022	Council work session - first draft of budget presented.
August 1-August 5, 2022	Additional departmental meetings to discuss and review council feedback from work session.
August 12, 2022	2nd draft of budget due to City Administrator.
August 24, 2022	Council work session –
September 6, 2022	At the Council meeting, the public hearing date on the proposed budget and proposed tax levy are approved by the Council.
By September 30, 2022	City Administrator certifies preliminary levy and hearing date to Chisago County.
September/October	Additional updates/fine tuning of budget before final presentation.
October 21, 2022	Final budget due to City Administrator.
November	County Auditor mails tax notices to each taxpayer.
November 9, 2022	Council work session – final budget presented.
December 6, 2022	Initial Truth-In-Taxation Hearing on 2023 Budget & Levy and adoption of the 2023 Budget and Levy.
December 20, 2022	Final adoption date of the 2023 Budget and Levy - if needed.

Request for Council Action

Date: December 29, 2021

Presented to: Mayor Iverson and City Council Members
Presented by: City Administrator Linwood
Department: Administration
Reference: 2022 city Fee Schedule
Method: Annual Meeting

***Background Information*:** Staff completes and annual review of the fee schedule to ensure that the fees are accurate and updated based on city policies and fees.

For 2022 the fee schedule to reflect the following changes:

- Chapter 10 – Building Permits - State Building Code raised requirement to have a building permit from 6 feet to 7 feet.
- Chapter 20 – Police Adminsistration Fees – CD's has been removed and replaced with electronic storage devices to reflect modern practices. Secondly, with the city providing police services for outside events if requested it was necessary to determine a median rate for a police officer that includes wage and benefits. That new fee is $73.10/hr. with a minimum of four hours.
- Chapter 36 – Utilties – Water, Sewer and Surface water rates were changed to reflect the 2022 rates as completed in the most recent utility rate studies. Water meter costs were updated per the city's cost to purchase, this is a pass through cost.
- Office Adminstrative Fees – Staff has removed mailed council packets – the city has no request of this in the last 7 to 10 years. All packets are now available online and the $100.00 for the year would not begin to cover the mailing costs for the packets.
- Community Center, Pavilion and Field Rental – Per the discussion in 2021 the use of the community center has been discontinued due to the two portable offices and the electronics in the room.

Request: To approve the City of Wyoming in 2022 Fee Schedule as presented.

CITY OF WYOMING
P.O. Box 188, 26885 Forest Blvd., Wyoming, MN 55092
Phone: 651-462-0575 Fax: 651-462-0576

2022 FEE SCHEDULE

CHAPTER 4 – ALCOHOLIC BEVERAGES & TOBACCO	
Non-intoxicating On/Sale	$220.00
Non-intoxicating Off/Sale	$35.00
Intoxicating Liquor On/Sale	$3,150.00
Intoxicating Liquor Off/Sale	$100.00
Intoxicating Liquor Sunday	$200.00
Temporary Liquor License	$100.00
Tobacco License	$90.00

CHAPTER 6 – AMUSEMENTS & ENTERTAINMENTS	
Lawful Gambling	10% contribution to City
Application Fee (Bingo, etc.)	$25.00
Maximum Investigation Fee for State License	$100.00

CHAPTER 8 – ANIMALS, ARTICLE II DOG LICENSE	
Dog at Large	$75.00

CHAPTER 10 - BUILDING PERMITS	
Building Permit, Silt Fence Escrow (90% refundable)	$900.00
Building Permit, Drainage Plan Escrow, Commercial/Industrial (90% refundable)	$1,300.00
Building Permit, Drainage Plan Escrow, Residential (90% refundable)	$275.00
Building Permit Fees: Based On Project Valuation	
Plan Review Fee	65% of Building Permit Fee
State Surcharge	Per MN Statute 326B.148
$1.00 to $500.00	$28.00
$501.00 to $2,000.00	$28.00 for the first $500.00 plus $3.70 for each additional $100.00, or fraction thereof, to and including $2,000.00
$2,001.00 to $25,000.00	$83.50 for the first $2,000.00 plus $16.55 for each additional $1,000.00, or fraction thereof, to and including $25,000.00
$25,001.00 to $50,000.00	$464.15 for the first $25,000.00 plus $12.00 for each additional $1,000.00, or fraction thereof, to and including $50,000.00
$50,001.00 to $100,000.00	$764.15 for the first $50,000.00 plus $8.45 for each additional $1,000.00, or fraction thereof, to and including $100,000.00
$100,001.00 to $500,000.00	$1,186.65 for the first $100,000.00 plus $6.75 for each additional $1,000.00, or fraction thereof, to and including $500,000.00
$500,001.00 to $1,000,000.00	$3,886.65 for the first $500,000.00 plus $5.50 for each additional $1,000.00, or fraction thereof, to and including $1,000,000.00
$1,000,001.00+	$6,636.65 for the first $1,000,000.00 plus $4.50 for each additional $1,000.00, or fraction thereof

2022 FEE SCHEDULE

Building Permit Flat Fees: No Valuation (Group IRC 1, 2, 3, & 4 Occupancies)	
Plan Review Fee	$0.00
Manufactured Home Installation (in park)	$80.00 + state surcharge
Residing	$80.00 + state surcharge
Reroofing	$80.00 + state surcharge
Window & Door Replacement	$80.00 + state surcharge
Fences	>7' in height - $50.00 + state surcharge <7' in height - $50.00
Demolition	$50.00 + state surcharge
Swimming Pools	$80.00 + state surcharge
Building Permit Fees: Value Less than $10,000.00 (Group IRC 1, 2, 3, & 4 Occupancies)	
Plan Review Fee	$0.00
Decks	$80.00 + state surcharge
Handicap Accessible Ramps	$80.00 + state surcharge
Remodeling	$80.00 + state surcharge
Finishing unfinished space	$80.00 + state surcharge
Storage Buildings under 250 square feet	$80.00 + state surcharge
Gazebos under 250 square feet	$80.00 + state surcharge
Plumbing, Heating, Fire Alarms & Automatic Fire Protection System Permit Fees	
Project Cost	
Up to $300.00 (Residential/Commercial)	$15.00 + state surcharge
$400.00 (Residential/Commercial)	$20.00 + state surcharge
$500.00 (Residential/Commercial)	$25.00 + state surcharge
$600.00 & Up (Residential)	$50.00 + state surcharge
Commercial	$50.00 + 1% of value + state surcharge
Grading Permit Fees (Based on Cubic Yards of Material)	
50 cubic yards or less	$23.50
51 to 100 cubic yards	$37.00
101 to 1,000 cubic yards	$37.00 for the first 100 cubic yards plus $17.50 for each additional 100 cubic yards or fraction thereof
1,001 to 10,000 cubic yards	$194.50 for the first 1,000 cubic yards, plus $14.50 for each additional 1,000 cubic yards or fraction thereof
10,001 to 100,000 cubic yards	$325.00 for the first 10,000 cubic yards, plus $66.00 for each additional 10,000 cubic yards or fraction thereof
100,001 cubic yards or more	$919.00 for the first 100,000 cubic yards, plus $36.50 for each additional 10,000 cubic yards or fraction thereof
Grading Plan Review Fee (Based on Cubic Yards of Material)	
State Surcharge	Per MN Statute 326B.148
50 cubic yards or less	$0.00
51 to 100 cubic yards	$23.50
101 to 1,000 cubic yards	$37.00
1,001 to 10,000 cubic yards	$49.25
10,001 to 100,000 cubic yards	$49.25 for the first 10,000 cubic yards, plus $24.50 for each additional 10,000 yards or fraction thereof

100,001 to 200,000 cubic yards	$269.75 for the first 100,000 cubic yards, plus $13.25 for each additional 10,000 cubic yards or fraction thereof
200,001 cubic yards or more	$402.25 for the first 200,000 cubic yards, plus $7.25 for each additional 10,000 cubic yards or fraction thereof
Other Inspections and Fees	
Investigation Fee (Work Done Without Obtaining a Permit)	Equal to Permit Fee
Gas Piping Installers License	$25.00
Inspections outside of normal business hours (Minimum Charge – 2 Hours)	$63.25 per hour [1]
Re-Inspection fees	$63.25 per hour [1]
Inspections for which no fee is specifically indicated (Minimum Charge – 30 Minutes)	$63.25 per hour [1]
Additional plan review required by changes, additions or revisions to plans (Minimum Charge – 30 Minutes)	$63.25 per hour [1]
For use of outside consultants for plan checking and inspections, or both 1. Or the total hourly cost to the jurisdiction, whichever is greatest. This cost shall include supervision, overhead, equipment, hourly wages, and fringe benefits of the employees involved 2. Actual costs include administrative and overhead costs	Actual costs [2]

CHAPTER 12 – BUSINESSES, ARTICLE II SAUNAS & MASSAGE, DIVISION 2 LICENSE & CERTIFICATE	
Initial Investigation Fee for Massage License	$515.00
Annual Massage Therapist License Fee	$50.00
Initial Investigation Fee for Massage Building Occupancy Certificate	$515.00
Annual Building Occupancy Certificate Fee	$150.00

CHAPTER 16 – ENVIRONMENT, ARTICLE I GENERAL, ARTICLE II NUISANCES	
No on-street parking 2:00am-6:00am	$25.00
Noise Complaints	$125.00
Prohibited Storage/Nuisance Property	$125.00

CHAPTER 18 – FIREWORKS PREVENTIONS & PROTECTION, ARTICLE III FIREWORKS	
Daily License Fee for Fireworks Display	$15.00
Business Fire Inspections	$25.00
Operational Permit (Fire Code)	$50.00

2022 FEE SCHEDULE

CHAPTER 20 – POLICE ADMINISTRATION FEES	
Police Reports	$0.25/page up to 100 pages actual cost thereafter
Motor Vehicle Reports	$0.25/page
Videos, ~~CD's,~~ Photographs, Electronic Storage Device ~~Processed~~	$10.00 + cost
Fingerprinting	$10.00
Vehicle Lock Out Service	$10.00
Administrative Traffic Citations	$60.00
Special Event Officer Fee	$73.10/hr (Min. of 4 Hours)
Impound Lot Fees	
Admin	$25.00
Storage	$25.00/day up to 30 days $50.00 per month after first 30 days
Tow Fee	$~~91~~150.00 + fees

CHAPTER 22 – OFFENSES & MISCELLANEOUS PROVISIONS, ARTICLE II CURFEW	
Curfew Violations	$125.00

CHAPTER 24 – PEDDLERS & SOLICITORS	
License Application Fee	$150.00
Each Additional Solicitor	$50.00

CHAPTER 26 – SOLID WASTE MANAGEMENT, ARTICLE II COLLECTION	
Generally Each Person Injured, Combined Single Limit Coverage, Together with Evidence of Worker's Compensation Insurance for the Licensee's Employees	$300,000.00
Surety Bond	$1,000.00
Annual Waste Hauler License Fee	$150.00

CHAPTER 30 – STREETS & SIDEWALKS, ARTICLE II EXCAVATIONS STREET OPENINGS	
Annual Excavation License Fee	$60.00
Bond	$5,000.00
Liability Insurance	$100,000.00 to $300,000.00 depending on size of Project/Excavation
Right-Of-Way Permits	
Registration Fee	$140.00
Excavation Permit Hole	$160.00
Excavation Permit Hole, New Development	$80.00
Trench Base	$160.00 Plus $0.40 per lineal foot over 100 feet Plus $0.20 per lineal foot over 100 feet new development
Obstruction Permit Fee	$100.00
Permit Extension Fee	$30.00
Delay Penalty	$60.00 Additional $10.00 for each day after 3 days
Public Right-of-Way Vacation	$175.00

Mailbox Assembly (Drop-Off)	$75.00

CHAPTER 32 – SUBDIVISIONS	
Subdivision with Public Improvements Preliminary Plat Escrow (remaining amount refundable)	$10,000.00+ $500.00/lot for subdivisions with 30 or more lots
Subdivision without Public Improvements Preliminary Plat Escrow (remaining amount refundable)	$1,000.00
Administrative Lot Line Adjustments	$100.00
Sketch Plan Review Application	$100.00 $500.00 Escrow
Preliminary Plat Application	$450.00+ $70.00 per lot
Final Plat Application	$200.00+ $1,000.00 Escrow
Parkland Dedication Fee (when accepted in lieu of land dedication)	$1,500.00 Park Dedication $300.00 Trail Dedication
Topographic Map	$20.00/acre

CHAPTER 34 – TRAFFIC – ARTICLE II OPERATION, ARTICLE III PARKING, ARTICLE IV OFF ROAD VEHICLES	
Excessive Acceleration	$75.00
Winter Parking (2:00 am-12:00 pm)	$75.00
Operating a Dirt Bike on the Roadway	$75.00

CHAPTER 36 – UTILITIES		
Article II Water		
Residential	Base Fee (5/8" to 7/8" Meter)	$~~37.95~~39.79
Residential	Per 100gal/20,000 or less	$.003287/gallon~~31.35 cent~~
Residential	Per 100gal/20,000 or more	$.004109/gallon~~39.19 cent~~
Commercial	Per 100gal/62,000 or less	$.003287/gallon~~31.35 cent~~
Commercial	Per 100gal/62,000 or more	$.004109/gallon~~39.19 cent~~
Commercial	**Base Fees – Meter Size**	
	1"	$~~53.13~~55.70
	1 1/2"	$71.61~~68.30~~
	2"	$115.38~~110.05~~
	3"	$437.64~~417.39~~
Curb Stop Connection Permit (WAC)		$3,990.00
Water Meter Costs for New Construction		
5/8" & ¾" Meters		$412~~389~~.00
All Other Meters		Cost of Meter + $75 Admin. Fee
Turn **ON** Water Seasonal or leak repair		$50.00
Turn **OFF** Water Seasonal or leak repair		$0.00
Inspection Fee		$70.00
Re-Inspection		$63.25
Emergency Call out Fee/After Hours		$100.00
Fine for turning On/Off water at Curb stop other than by a City employee		$100.00
Lawn Sprinkler Systems		
Sprinkler System Installation Permit Fee		$30.00 + state surcharge

2022 FEE SCHEDULE

Alternate Water Source Installation Permit Fee	$30.00 + state surcharge
Cross Connection Inspection Fee	$30.00 + state surcharge
Alternate Water Source Sign	$15.00
New Seed or Sod Permit	N/A
Watering Restriction Penalties – Within 12 Month Period	
1st Violation	Warning
2nd Violation	$50.00
3rd Violation	$100.00
4th Violation	$200.00
5th Violation	Service Disconnection
Hydrant Meter Deposit meter (refundable when meter returned)	$700.00
Hydrant Water Rental & Usage Fee Meter Rental Includes use of meter and up to 2,000 gallons of water (Usage per 100 gallons)	$25.00/Month 37.38 cents
Article lll – Sewer	
Permit Fee for Connection to Sanitary Sewer Plus Installation Costs (SAC)	$4,550.00
Base Fee	$~~30.51~~30.97
Cost Per Gallons (Sewage Cost Per/100 gallons)	$.0132/gallon~~1.30~~
Delinquent/Late Fee	5% of current bill
Surface Water Management (Charge per quarter)	
Land Use Designation	
Agricultural/Single Family Residential/One and Two Family Residential/Rural Residential	$~~4.00~~7.20/Parcel
High Density Residential/Manufactured Homes	$~~32.40~~58.32/Acre
Commercial	$58.32~~32.40~~/Acre
Central Business	$58.32~~32.40~~/Acre
Office and Health Care	$58.32~~32.40~~/Acre
Industrial (Urban)	$75.60~~42.00~~/Acre
Industrial (Non-Urban)	$7.20~~4.00~~/Parcel
Carlos Avery WMA (Exempt)	$0.00
Connections Fees	
Inspection Fee	$70.00
Re-Inspection Fee	$70.00
Corporate Connections	$70.00
Installer's License Public Liability Insurance	$100,000.00 to $300,000.00 Depending on size of project
Bond	$2,000.00
Driveway Permit	$50.00 + Cost of Culvert
Article V Subsurface Sewage Treatment Systems	
Septic System Permits	
Design Change – Redesign	$50.00
Design Change – Relocate	$100.00
Site Verification of soil (prior to or w/o permit app.)	$100.00
Expired permit renewal	$100.00

Repair only (lateral replacement, convert to holding tank)	$50.00
SSTS Permit-Non pressurized systems	$200.00
SSTS Permit – Pressurized systems	$250.00
SSTS Permit - Tank Only	$50.00
SSTS Permit - addition of pretreatment	$150.00
Midsized SSTS Permit - tank only	$150.00
TYPE IV & V SSTS Permit up to 4,999 gpd*	$500.00
Midsized SSTS Permit 5,000 – 9,999 gpd*	$500.00 Plus any associated engineering fees
Midsized System hookup (w/o individual tanks)	$70.00
Operating Permit – Single Family/Residential	$25.00/Year Pretreatment systems are for life of system
Operating Permit – Commercial up to 4,999 gpd*	$50.00 per year
Operating Permit – Commercial 5,000 to 9,999 gpd*	$100.00/Year + any associated engineering fees
Land Application site 50 acres or less (5 year permit)	$150.00
Land Application site greater than 50 acres (5 year permit)	$250.00
Land application site – permit renewal	$50.00
Compliance Inspection	$200.00
Compliance Inspection – Tank Only, also for tank abandonment certificate (not required, performed upon request)	$100.00
Winter Compliance inspections	$250.00
Re-Inspection	$63.25/Trip
On-Site Meeting (Requested by designer/applicant)	$100.00
*Gallons Per Day	

CHAPTER 40 – ZONING	
Fee for Zoning Ordinance Amendment	$220.00 + $750.00 Escrow
Conditional Use Permit Application Non-Commercial/Residential	$220.00 + $750.00 Escrow
Conditional Use Permit Application Commercial	$220.00 + $1,000.00 Escrow
PUD Application	$220.00 + $1,000.00 Escrow
Mixed Use Development Application	$220.00 + $1,000.00 Escrow
Zoning Letter	$50.00
Wetland Service Requests	
No-Loss & Exemption Determination	$200.00 fee + $500.00 Escrow
Delineation Approval (less than 10 acre site)*	$200.00 fee + $500.00 Escrow
Delineation Approval (10 acre site or larger)*	$300.00 fee + $500.00 Escrow

2022 FEE SCHEDULE

Replacement Plan Application (less than 10 acre site)	$500.00 fee + $500.00 Escrow
Replacement Plan Application (10 acre site or larger)	$750.00 fee + $1,000.00 Escrow
Wetland Banking Application (10 acre site or larger)	$500.00 fee + $1,000.00 Escrow
Annual Wetland Mitigation Monitoring	$500.00 fee + $500.00 Escrow
Other Wetland Services	$200.00 fee + $500.00 Escrow
Site Plan Approval	$220.00 + $1,000.00 Escrow
Major Amendment to Site Plan	$220.00 + $1,000.00 Escrow
Minor Amendment to Site Plan	$175.00
Variance Application	$220.00 + $750.00 Escrow
Sign Permit Application – Permanent	$75.00
Sign Permit Application – Temporary	$50.00
Fence Permit Application	$50.00
Tree Mitigation Fee	$100.00 per caliper inch
Agricultural Building Site Permit	$30.00
City Attorney	Per current contract rate schedule
City Engineer Plan Review & Inspections	Per current contract rate schedule

OFFICE ADMINISTRATION FEES	
City Map	$10.00
Color Zoning Map	$12.00
Photocopies – 1 to 100 pages (MN Statute, section 13.03)	$0.25 per page
Photocopies – Over 100 pages (MN Statute, section 13.03)	Actual cost of data collection and copies
Photocopies – Plotter (Black/White)	$.30/per lineal ft.
Photocopies – Plotter (Color)	$.55/per lineal ft.
Scan – Plotter	$1.00/page
Faxing	$1.00 per page
~~Mailed Council Packets~~	~~$100.00 per year~~
Administrative – Assessment Certification Fee	$15.00/Parcel
Assessment Search	$25.00
NSF Check Charge (Non-Sufficient Funds)	$35.00
Notary Stamp	$1.00/Document
Election Filing Fee	$2.00

2022 FEE SCHEDULE

COMMUNITY CENTER, PAVILION & FIELD RENTAL FEES	
~~Community Center~~	
~~Private Use/City Resident~~	~~$25.00~~ ~~$100.00 refundable damage deposit~~
~~Private Use/Non-Resident~~	~~$75.00~~ ~~$100.00 refundable damage deposit~~
~~Civic Group Use~~	~~No Fee~~ ~~$100.00 refundable damage deposit~~
Park Pavilion Rental (up to 4 hours)	$100.00 refundable damage deposit + $25.00 Non-residents $0.00 Residents
Softball & Soccer Fields	$10.00 for up to 2 hours/field $5.00 for each additional hour/field
Tournament Play	$150.00 per day/field

PUBLIC WORKS EQUIPMENT FEES	
½ Ton Pick-Up	$40.00/Hour
¾ Ton Pick-Up	$45.00/Hour
Single Axel Dump Truck with Operator	$100.00/Hour
Double Axel Dump Truck with Operator	$128.00/Hour
Skid Steer Cat with Operator	$88.00/Hour
Cat Loader with Operator	$145.00/Hour
Cat Grader - 14 Feet with Operator	$150.00/Hour
Salt Brine	$.25 Cents/Gallon
Hand Operated Compactor	$40.00/Hour
John Deere Backhoe/Excavator	$100.00/Hour
John Deere Tractor with Operator	$100.00/Hour
Polaris ATV	$60.00/Hour
Generator	$60.00/Hour
10 Cu Cement Mixer	$30.00/Hour
Asphalt Hotbox	$65.00/Hour
Walk Behind Striper	$30.00/Hour
Discharge Pump	$30.00/Hour
Sewer Crane Truck	$95.00/Hour
Concrete Saw	$30.00/Hour
Trailer	$60.00/Hour
Chain Saw with Operator	$60.00/Hour
Labor	$40.00/Hour
Overtime Labor	$60.00/Hour

DRAFT MINUTES
CITY COUNCIL
REGULAR MEETING
CITY OF WYOMING, MINNESOTA
DECEMBER 21, 2021
7:00PM

CALL TO ORDER:

Mayor Lisa Iverson called the Regular Meeting of the Wyoming City Council for December 21, 2021 to order at 7:00 PM

CALL OF ROLL:

On a Call of the Roll the following members of the Wyoming City Council were present: Councilmembers Lisa Iverson, Linda Nanko Yeager, Brett Ohnstad, Dennis Schilling, and Claire Luger

***ABSENT**: None*

Also Present: Tom Loonan, Eckberg Lammers, Robb Linwood, City Administrator, Mark Erichson-WSB, Paul Hoppe - Public Safety Director, Fred Weck, Zoning Administrator/Building Official and Chuck Almhjeld, Public Works Superintendent

DETERMINATION OF A QUORUM:

PLEDGE OF ALLEGIANCE:

OPEN FORUM:

Jim Schulze 8275 Lake Blvd– Asked about what 'strings' may come along with item #4 relating to the American Rescue Plan Act funds. He stated that for years he has had a great deal of frustration with a telephone company serving the City by the name of Frontier Communications. He stated that he received something in the mail that states that he will be allowed to go back and determine which days he did not have service and then they would be willing to give him some reimbursement. He stated that he thinks that is a joke and asked if there was anything he could assist with in getting this bad company removed from the City.

City Administrator Linwood – Explained that the American Rescue Plan Act funds are something that the City receives from the Federal Government. The resolution being considered this evening is for a dividend of unclaimed funds from other municipalities and townships within the State. He stated that he would not say that there are 'strings' attached to the funds, but there is guidance from the Treasury on what those funds can be used for. He noted that the City has until December of 2024 to use those funds and reviewed some of the current guidance for the usage of the funds. He stated that regarding Frontier Communications, the Minnesota Utility Commission had an open house for customers to come and air their grievances with Frontier. He stated that there was a finding against them but right now the only other option in Wyoming is Mid-Continent, but he was unsure if that service was available for Mr. Schultz.

Mr. Schulze – Stated that he could have service from Mid-Continent for $1,500 for them to extend the service to him, however they have also said they would not be inclined to do it even for that fee because he has access to 'service' through Frontier.

Mayor Iverson – Asked Mr. Schultz to leave his contact information with City Administrator Linwood.

1. Swearing in of Public Safety Director, Neil Bauer

Mayor Iverson – Administered the oath of office to Neil Bauer, Public Safety Director.

Former Public Safety Director Hoppe – Expressed his endorsement and congratulations to incoming Public Safety Director Bauer and explained that Mr. Bauer's wife would pin on his badge.

Mayor Iverson – Recessed the meeting at 7:13 p.m. and reconvened at 7:20 p.m. She presented a plaque in appreciation of the service of Former Public Safety Director Hoppe.

APPROVAL OF MINUTES:

2. Consider approving the minutes of the "Regular Meeting" of the Wyoming, Minnesota City Council for December 7, 2021

A MOTION WAS MADE BY COUNCILMEMBER LUGER, SECONDED BY COUNCILMEMBER OHNSTAD, TO APPROVE THE MINUTES OF THE "REGULAR MEETING" OF THE WYOMING, MINNESOTA CITY COUNCIL FOR DECEMBER 7, 2021 AS SUBMITTED.

Voting Aye: Schilling, Nanko Yeager, Luger, Ohnstad, Iverson
Voting Nay: None
Abstain: None
Absent: None

SCHEDULED BID LETTINGS: NONE

SCHEDULED PUBLIC HEARINGS: NONE

CONSENT AGENDA:

Items under the "Consent Agenda" will be adopted with one motion; however, council members may request individual items to be pulled from the consent agenda for discussion and action if they choose.

3. To consider authorizing the payment of recommended bills, payroll, and journal entries for period of December 8, 2021 to December 21, 2021
4. A consider **Resolution 21-12-131** a resolution to accept the coronavirus local fiscal recovery fund established under the American Rescue Plan Act
5. To consider **Resolution 21-12-132** a resolution approving payment to Becker Arenda Products, Inc. for the Swenson Park Project in the amount of $66,192.50.

A MOTION WAS MADE BY COUNCILMEMBER SCHILLING, SECONDED BY COUNCILMEMBER OHNSTAD, TO APPROVE #3, #4, and #5 OF THE WYOMING CITY COUNCIL CONSENT AGENDA

Voting Aye: Schilling, Nanko Yeager, Luger, Ohnstad, Iverson
Voting Nay: None
Abstain: None
Absent: None

ACKNOWLEDGE RECEIPT OF REPORTS OF OFFICERS, BOARDS, COMMISSIONS AND DEPARTMENTS HEADS:

6. Report of the Public Safety Director, Paul Hoppe for December 15, 2021

7. Report of City Building Official, Fred Weck, IV for December 15, 2021

8. Report of City Attorney Tom Loonan for December 15, 2021

9. Report of City Engineer Mark Erichson, WSB for December 17, 2021

10. Report of Public Works Superintendent Chuck Almhjeld for December 15, 2021

COMMUNICATIONS:

11. Franchise Fees Open House Communication

City Administrator Linwood – Explained that there will be an Open House on January 5, 2022 from 5:00 p.m. to 7:00 p.m. to discuss Franchise Fees and how they will impact the ability of the City to move forward with the street reconstruction plans.

OLD BUSINESS: NONE

NEW BUSINESS

12. To consider the Wyoming Fire Relief Associations request to the City of Wyoming raising the Relief Association's pension level to $4,000 per year of active service

City Administrator Linwood – Reviewed the information presented by Alex Balmer, Treasurer of the Wyoming Fire Relief Association. He explained that they are asking for an increase from $3,500/year of service to $4,000/year of service and noted that staff is recommending approval. He noted that the City contributes $200 per year, per fire fighter towards this fund. He answered Council questions about vesting, expected retirements, funding levels and noted that this will be looked at annually.

A MOTION WAS MADE BY COUNCILMEMBER IVERSON, SECONDED BY COUNCILMEMBER LUGER, TO APPROVE THE REQUEST FROM THE WYOMING FIRE RELIEF ASSOCIATION TO THE CITY OF WYOMING RAISING THE RELIEF ASSOCIATION'S PENSION LEVEL TO $4,000 PER YEAR OF ACTIVE SERVICE.

Voting Aye: Schilling, Nanko Yeager, Luger, Ohnstad, Iverson
Voting Nay: None
Abstain: None
Absent: None

13. To consider **Resolution 21-12-133** a resolution receiving the feasibility report and setting the Public Hearing for the 2022 East Viking Boulevard Improvement project

City Engineer Erichson – Gave an overview of the results of the feasibility study, assessment process, and answered Council questions regarding the East Viking Boulevard project He explained that staff is asking the Council to accept the study and set the public hearing for this project.

Audience Member – Asked that County Commissioner Ben Montzka be present at the upcoming neighborhood meetings for this project because the County bears a lot of responsibility for what has happened on this roadway.

There was consensus of the Council to extend an invitation to all the County Commissioners to attend this meeting.

A MOTION WAS MADE BY COUNCILMEMBER SCHILLING, SECONDED BY COUNCILMEMBER OHNSTAD, TO APPROVE RESOLUTION 21-12-133 A RESOLUTION RECEIVING THE FEASIBILTY REPORT AND SETTTING THE PUBLIC HEARING FOR THE 2022 EAST VIKING BOULEVARD IMPROVEMENT PROJECT.

Voting Aye: Schilling, Nanko Yeager, Luger, Ohnstad, Iverson
Voting Nay: None
Abstain: None
Absent: None

14. To consider Approval of the City of Wyoming Emergency Operation Plan Update
15. To consider **Resolution 21-12-134** a resolution adopting the National Incident Management System as the basis for emergency management operations

Former Public Safety Director Hoppe– Gave a brief overview of the updates to the City's Emergency Operation Plan (EOP) and the National Incident Management System (NIMS).

Council Member Nanko Yeager – Asked if there would be multiple paper copies of this information available in accessible places in case there is a scenario when computers are inoperative.

Former Public Safety Director Hoppe - Stated that this document will be summarized and available in physical handbook form in all of the City vehicles. He noted that there will also be a hard copy of the document available at City Hall, the Fire Department, the Police Department, and at Public Works. He stated that because there are some things included, such as phone numbers, it is not necessarily a full public document because they would like to keep some of this information confidential.

A MOTION WAS MADE BY COUNCILMEMBER SCHILLING, SECONDED BY COUNCILMEMBER LUGER, TO APPROVE THE CITY OF WYOMING EMERGENCY OPERATION PLAN UPDATE AS PRESENTED.

Voting Aye: Schilling, Nanko Yeager, Luger, Ohnstad, Iverson
Voting Nay: None
Abstain: None
Absent: None

A MOTION WAS MADE BY COUNCILMEMBER LUGER, SECONDED BY COUNCILMEMBER OHNSTAD, TO APPROVE RESOLUTUION 21-12-134 A RESOLUTION ADOPTING THE NATIONAL INCIDENT MANAGEMENT SYSTEM AS THE BASIS FOR EMERGENCY MANAGEMENT OPERATIONS.

Voting Aye: Schilling, Nanko Yeager, Luger, Ohnstad, Iverson
Voting Nay: None
Abstain: None
Absent: None

16. To consider the hiring of Alex Saxe as Assistant City Administrator with a starting wage of $36.21/hour with a tentative start date of January 10, 2021

City Administrator Linwood – Explained that the City received 17 applications for this position and explained the interview process. He noted that Alex Saxe was selected as the top candidate and gave a brief overview of Mr. Saxe's education and experience.

Mayor Iverson – Clarified that although Mr. Saxe has the same last name as Stacy who works in Accounting for the City, they are not related.

A MOTION WAS MADE BY COUNCILMEMBER OHNSTAD, SECONDED BY COUNCILMEMBER SCHILLING, TO APPROVE HIRING ALEX SAXE AS ASSISTANT CITY ADMINISTRATOR WITH A STARTING WAGE OF $36.21/HOUR WITH A TENTATIVE START DATE OF JANUARY 10, 2021.

Voting Aye: Schilling, Nanko Yeager, Luger, Ohnstad, Iverson
Voting Nay: None
Abstain: None
Absent: None

COUNCIL REPORTS:

Council Member Ohnstad – No report.

Council Member Nanko Yeager – Attended the Sewer Commission meeting.

Council Member Luger – No report.

Council Member Schilling – Attended the EDA meeting.

Mayor Iverson – Attended the EDA meeting, the Sewer Commission meeting, the retirement of Mayor Emerson from White Bear Lake, and the Park Advisory Commission meeting. She read aloud a letter to Public Safety Director Hoppe from Congressman Stauber.

Former Public Safety Director Hoppe – Expressed his appreciation for the support of the community, elected officials, and staff throughout his years with the City. He stated that is has been an honor to serve the City of Wyoming.

Mayor Iverson – recessed the meeting at 8:07 p.m. and reconvened at 8:15p.m.

City Attorney Loonan He stated that at this time the Council will be entering a closed session under MN State Statute 13D.05, Subd 3(a) to discuss the annual the review of City Administrator Robb Linwood. He noted that City Administrator Linwood has consented to the closed session for this purpose.

A MOTION WAS MADE BY COUNCILMEMBER SCHILLING, SECONDED BY COUNCILMEMBER LUGER, TO APPROVE GOING INTO A CLOSED SESSION UNDER MN STATE STATUTE 13D.05, SUBD. 3(A) FOR AN ANNUAL PERFORMANCE EVALUATION OF CITY ADMINISTRATOR ROBB LINWOOD.

Voting Aye: Schilling, Nanko Yeager, Luger, Ohnstad, Iverson
Voting Nay: None
Abstain: None
Absent: None

A MOTION WAS MADE BY COUNCILMEMBER SCHILLING, SECONDED BY COUNCILMEMBER OHNSTAD, TO EXIT THE CLOSED SESSION AND GO BACK INTO AN OPEN MEETING.

Voting Aye: Schilling, Nanko Yeager, Luger, Ohnstad, Iverson
Voting Nay: None
Abstain: None
Absent: None

City Attorney Loonan – Stated that the Council was in a Closed Session under MN State Statute 13D.05, Subd. 3(a) regarding City Administrator Linwood's annual performance review. The Closed Session was attended by Mayor Iverson, Councilmembers Ohnstad, Schilling, Nanko Yeager and Luger as well as City Administrator Linwood and himself. He explained that no formal motions were offered or passed at the Closed Session.

A MOTION WAS MADE BY COUNCILMEMBER LUGER, SECONDED BY COUNCILMEMBER IVERSON, TO ADJOURN THE DECEMBER 21 2021 "REGULAR MEETING" OF THE WYOMING, MINNESOTA CITY COUNCIL REGULAR MEETING AT 8:48P.M.

Voting Aye: Schilling, Nanko Yeager, Luger, Ohnstad, Iverson
Voting Nay: None
Abstain: None
Absent: None

A portion of this public meeting may be closed to discuss "Labor Negotiation Strategies"; "Misconduct allegations or charges"; "Attorney-client privilege"; or "Performance evaluations" as per MN State Statute 13D.01-.05.

NEXT REGULAR MEETING:
JANUARY 4, 2022
7:00PM

Check Number	Name	Check Date
52802	PACIFIC LIFE INSURANCE	12/21/2021

Item Code	GL Number	Amount
ROTH	101-0000-21712	230.75
		230.75

Check Number	Name	Check Date
EFT840	MN STATE RETIREMENT	12/21/2021

Item Code	GL Number	Amount
CITY HSCP CONT	101-0000-21706	11,354.13
HCSP	101-0000-21710	0.00
		11,354.13

Check Number	Name	Check Date
EFT841	SELECTACCOUNT,	12/21/2021

Item Code	GL Number	Amount
DEP CARE	101-0000-21711	0.00
FSA CONT	101-0000-21711	0.00
HSA CITY CONT	101-0000-21707	500.00
HSA CONT	101-0000-21707	2,069.62
		2,569.62

Check Number	Name	Check Date
EFT842	P.E.R.A.,	12/21/2021

Item Code	GL Number	Amount
CORD PERA	101-0000-21704	2,535.88
DCP PERA	101-0000-21704	16.67
DCP PERA MATCH	101-0000-21704	16.67
PERA CITY MATCH	101-0000-21704	2,926.01
PF PERA	101-0000-21704	4,778.57
PF PERA CITY	101-0000-21704	7,167.89
		17,441.69

Check Number	Name	Check Date
EFT843	INTERNAL REVENUE SERVICE,	12/21/2021

Item Code	GL Number	Amount
FITW	101-0000-21701	7,387.09
MEDICARE_EE	101-0000-21703	1,354.50
MEDICARE_ER	101-0000-21703	1,354.50
SOCSEC_EE	101-0000-21703	3,397.59
SOCSEC_ER	101-0000-21703	3,397.59
		16,891.27

Check Number	Name	Check Date
EFT844	STATE OF MINNESOTA,	12/21/2021

Check Number	Name	Check Date

Item Code	GL Number	Amount
SITW	101-0000-21702	3,485.99
		3,485.99

General Checking Account 10100
Total Amount Being Paid: $51,973.45
Total Number of Checks: 6

Mayor Iverson

Councilmember Luger

Councilmember Nanko/Yeager

Councilmember Schilling

Councilmember Ohnstad

City of Wyoming
Check Detail Register

12-31-2021

Check # / Invoice #	Check Date	Vendor Name		
	General Ledger #		mount	Comment
52805	**12/31/2021**	**ASPEN MILLS**		
14204				
	101-2110-44080	UNIFORMS	$275.75	UNIFORMS
15373				
	101-2110-44080	UNIFORMS	$24.00	UNIFORMS
285729				
	101-2110-44080	UNIFORMS	$1,342.40	UNIFORMS
	Total for ASPEN MILLS		$1,642.15	
52806	**12/31/2021**	**BOUND TREE MEDICAL**		
103299053				
	101-2110-42100	OPERATING SUPPL	$210.27	OPERATING SUPPLIES
	Total for BOUND TREE MEDICAL		$210.27	
52807	**12/31/2021**	**CARGILL, INCORPORATED**		
2906735426				
	101-3100-44400	SALT & SAND	$2,880.92	SALT & SAND
2906743972				
	101-3100-44400	SALT & SAND	$2,858.42	SALT & SAND
	Total for CARGILL, INCORPORATED		$5,739.34	
52808	**12/31/2021**	**CINTAS**		
4105702713				
	101-3100-44180	UNIFORMS	$17.53	STREETS
	101-3100-42100	OPERATING SUPPL	$135.80	SHOP SUPPLIES
	Total for CINTAS		$153.33	
52809	**12/31/2021**	**Cornerstone Pub & Prime**		
00013983				
	101-0000-32100	BUSINESS LICENSI	$45.00	Gambling License - Amusement Machines
	Total for Cornerstone Pub & Prime		$45.00	
52810	**12/31/2021**	**CRAIG JOHNSON**		
12/29/2021				
	602-0000-11500	ACCOUNTS RECEI\	$72.60	Sewer Usage
	601-0000-11500	ACCOUNTS RECEI\	$20.63	Water - Meter Charge
	601-0000-11500	ACCOUNTS RECEI\	$17.51	Water Usage
	651-0000-11500	ACCOUNTS RECEI\	$2.18	Surface Water Mgmt
	601-0000-11500	ACCOUNTS RECEI\	$1.32	State Surcharge
	Total for CRAIG JOHNSON		$114.24	
52811	**12/31/2021**	**CW TECHNOLOGY**		
INV00072374				
	602-9425-42950	SCADA SYSTEM	$50.19	SCADA SYSTEM
	Total for CW TECHNOLOGY		$50.19	
52812	**12/31/2021**	**DRESEL CONTRACTING**		
14071				
	651-9425-44410	STREET MAINT MA	$900.00	STREET MAINT MATERIALS
	Total for DRESEL CONTRACTING		$900.00	

City of Wyoming
Check Detail Register

12-31-2021

Check # / Invoice #	Check Date	Vendor Name		
	General Ledger #		mount	Comment
52813	**12/31/2021**	**ELIZABETH & DANIEL JR HANF**		
12/29/2021				
	602-0000-11500	ACCOUNTS RECEI\	$2.02	Sewer Usage
	601-0000-11500	ACCOUNTS RECEI\	$1.04	Water - Meter Charge
	601-0000-11500	ACCOUNTS RECEI\	$0.49	Water Usage
	651-0000-11500	ACCOUNTS RECEI\	$0.11	Surface Water Mgmt
	601-0000-11500	ACCOUNTS RECEI\	$0.07	State Surcharge
	Total for ELIZABETH & DANIEL JR HAN		$3.73	
52814	**12/31/2021**	**ENGINEERING UNLIMITED INC**		
INV061915				
	101-3100-44010	REPAIRS & MAINT.	$121.82	REPAIRS & MAINT. - BUILDINGS
	Total for ENGINEERING UNLIMITED IN		$121.82	
52815	**12/31/2021**	**FAIRVIEW HEALTH SERVICES**		
15005723953				
	101-2110-43000	PROFESSIONAL SE	$467.00	PROFESSIONAL SERVICE (GENERAL)
	Total for FAIRVIEW HEALTH SERVICES		$467.00	
52816	**12/31/2021**	**FAIRVIEW HEALTH SERVICES**		
15005723673				
	101-2110-43000	PROFESSIONAL SE	$451.00	PROFESSIONAL SERVICE (GENERAL)
	Total for FAIRVIEW HEALTH SERVICES		$451.00	
52817	**12/31/2021**	**FAIRVIEW HEALTH SERVICES**		
15005723499				
	101-2110-43000	PROFESSIONAL SE	$553.00	PROFESSIONAL SERVICE (GENERAL)
	Total for FAIRVIEW HEALTH SERVICES		$553.00	
52818	**12/31/2021**	**FAIRVIEW HEALTH SERVICES**		
15005723838				
	601-9425-42310	CONTRACTED SER	$90.00	CONTRACTED SERVICES
	Total for FAIRVIEW HEALTH SERVICES		$90.00	
52819	**12/31/2021**	**FERGUSON WATERWORKS**		
0487781				
	601-9425-42290	METERS	$25,330.00	METERS
0488132				
	601-9425-42400	SMALL TOOLS/MIN	$511.93	SMALL TOOLS/MINOR EQUIPMENT
	Total for FERGUSON WATERWORKS		$25,841.93	
52820	**12/31/2021**	**FOREST LAKE CONTRACTING**		
6574				
	101-3100-42260	SIGN MATERIAL/RI	$286.00	SIGN MATERIAL/REPLACEMENT
	Total for FOREST LAKE CONTRACTING		$286.00	
52821	**12/31/2021**	**GRAINGER INC.**		
9134478255				
	651-9425-44040	REPAIRS & MAINT.	$301.44	REPAIRS & MAINT. - EQUIPMENT
	Total for GRAINGER INC.		$301.44	

City of Wyoming
Check Detail Register

12-31-2021

Check # / Invoice #	Check Date	Vendor Name		
	General Ledger #		mount	Comment
52822	**12/31/2021**	**HYDRAULICS PLUS & CONSULTING**		
14938				
	651-9425-44040	REPAIRS & MAINT.	$40.79	REPAIRS & MAINT. - EQUIPMENT
	Total for HYDRAULICS PLUS & CONSUI		$40.79	
52823	**12/31/2021**	**IDEAL SERVICES INC**		
11522				
	601-9425-44390	REPAIRS & MAINT.	$280.00	REPAIRS & MAINT. - WELLS
	Total for IDEAL SERVICES INC		$280.00	
52824	**12/31/2021**	**INNOVATIVE OFFICE SOLUTIONS**		
IN3601736				
	101-2110-42000	SUPPLIES - OFFICE	$79.28	SUPPLIES - OFFICE/COPY/COMPUTR
IN3604282				
	101-2110-42000	SUPPLIES - OFFICE	$29.98	SUPPLIES - OFFICE/COPY/COMPUTR
IN3604381				
	101-2110-42000	SUPPLIES - OFFICE	$27.00	SUPPLIES - OFFICE/COPY/COMPUTR
IN3596948				
	101-2110-42000	SUPPLIES - OFFICE	$12.82	SUPPLIES - OFFICE/COPY/COMPUTR
	Total for INNOVATIVE OFFICE SOLUTI		$149.08	
52825	**12/31/2021**	**JASON LUMSDEN**		
12272021				
	651-9425-42300	SAFETY EQUIPMEN	$169.99	SAFETY EQUIPMENT
	Total for JASON LUMSDEN		$169.99	
52826	**12/31/2021**	**KALLIE REZNY**		
359214				
	101-2110-42080	TRAINING AND IN	$204.02	TRAINING AND INSTRUCTION
	Total for KALLIE REZNY		$204.02	
52827	**12/31/2021**	**KRAMER MECHANICAL**		
24747				
	101-5200-44010	REPAIRS & MAINT.	$136.00	REPAIRS & MAINT. - BUILDINGS
24731				
	101-1400-44010	REPAIRS & MAINT.	$1,085.00	REPAIRS & MAINT. - BUILDINGS
	Total for KRAMER MECHANICAL		$1,221.00	
52828	**12/31/2021**	**MENARDS- FOREST LAKE**		
75998				
	101-3100-44010	REPAIRS & MAINT.	$692.50	REPAIRS & MAINT. - BUILDINGS
75992				
	601-9425-42400	SMALL TOOLS/MIN	$27.33	SMALL TOOLS/MINOR EQUIPMENT
76539				
	101-3100-44400	SALT & SAND	$94.90	SALT & SAND
	Total for MENARDS- FOREST LAKE		$814.73	
52829	**12/31/2021**	**METRO SALES**		
INV1948042				
	101-2400-42000	SUPPLIES - OFFICE	$220.36	SUPPLIES - OFFICE/COPY/COMPUTR
	Total for METRO SALES		$220.36	

City of Wyoming
Check Detail Register

12-31-2021

Check # / Invoice #	Check Date	Vendor Name		
	General Ledger #		mount	Comment
52830	**12/31/2021**	**MINNESOTA CHIEFS OF POLICE ASSN**		
12838				
	101-2110-44330	DUES & SUBSCRIP	$320.00	DUES & SUBSCRIPTIONS
	Total for MINNESOTA CHIEFS OF POLI		$320.00	
52831	**12/31/2021**	**MINNESOTA PLAYGROUND, INC.**		
2021567				
	101-5200-44010	REPAIRS & MAINT.	$1,384.00	REPAIRS & MAINT. - BUILDINGS
	Total for MINNESOTA PLAYGROUND, I		$1,384.00	
52832	**12/31/2021**	**MINNESOTA POLICE & PEACE OFFICERS A**		
12142021				
	101-2110-44330	DUES & SUBSCRIP	$114.00	DUES & SUBSCRIPTIONS
	Total for MINNESOTA POLICE & PEACE		$114.00	
52833	**12/31/2021**	**MINNESOTA VALLEY TESTING LABS**		
1122270				
	601-9425-43110	LAB COSTS	$97.50	LAB TESTS
	Total for MINNESOTA VALLEY TESTING		$97.50	
52834	**12/31/2021**	**MUNICIPAL EMERGENCY SERVICES**		
IN1659080				
	101-2110-42100	OPERATING SUPPL	$99.21	OPERATING SUPPLIES
	Total for MUNICIPAL EMERGENCY SER		$99.21	
52835	**12/31/2021**	**NATHAN LARSON**		
12/29/2021				
	602-0000-11500	ACCOUNTS RECEI\	$14.01	Sewer Usage
	601-0000-11500	ACCOUNTS RECEI\	$12.01	Water - Meter Charge
	601-0000-11500	ACCOUNTS RECEI\	$3.38	Water Usage
	651-0000-11500	ACCOUNTS RECEI\	$1.27	Surface Water Mgmt
	601-0000-11500	ACCOUNTS RECEI\	$0.77	State Surcharge
	Total for NATHAN LARSON		$31.44	
52836	**12/31/2021**	**NORTHERN TOOL & EQUIPMENT**		
0362189898				
	601-9425-42400	SMALL TOOLS/MIN	$13.99	SMALL TOOLS/MINOR EQUIPMENT
	Total for NORTHERN TOOL & EQUIPME		$13.99	
52837	**12/31/2021**	**RAPIT PRINTING INC**		
233172				
	101-2110-42000	SUPPLIES - OFFICE	$61.43	SUPPLIES - OFFICE/COPY/COMPUTR
	Total for RAPIT PRINTING INC		$61.43	
52838	**12/31/2021**	**RITEWAY BUSINESS FORMS**		
21-85296				
	101-1400-42000	SUPPLIES - OFFICE	$284.00	SUPPLIES - OFFICE/COPY/COMPUTR
	Total for RITEWAY BUSINESS FORMS		$284.00	

City of Wyoming
Check Detail Register

12-31-2021

Check # / Invoice #	Check Date	Vendor Name		
	General Ledger #		mount	Comment
52839	**12/31/2021**	**ROETTGER, JOHN**		
19823020				
	101-2110-44080	UNIFORMS	$232.54	UNIFORMS
	Total for ROETTGER, JOHN		$232.54	
52840	**12/31/2021**	**SIGNS BY JILL**		
2222				
	101-2110-42100	OPERATING SUPPL	$109.00	OPERATING SUPPLIES
	Total for SIGNS BY JILL		$109.00	
52841	**12/31/2021**	**Splitrocks**		
00014018				
	101-0000-32100	BUSINESS LICENSI	$245.00	Gambling License - Bowling Alleys
	101-0000-32100	BUSINESS LICENSI	$15.00	Gambling License - Pool Halls
	101-0000-32100	BUSINESS LICENSI	$540.00	Gambling License - Amusement Machines
	Total for Splitrocks		$800.00	
52842	**12/31/2021**	**TIMESAVER OFF SITE SECRETARIAL**		
M26965				
	101-1400-42310	CONTRACTED SER	$156.25	CONTRACTED SERVICES
	Total for TIMESAVER OFF SITE SECRET		$156.25	
52843	**12/31/2021**	**TRI-COUNTY LAW ENFORCEMENT**		
12012021				
	101-2110-44330	DUES & SUBSCRIP	$75.00	DUES & SUBSCRIPTIONS
	Total for TRI-COUNTY LAW ENFORCEM		$75.00	
52844	**12/31/2021**	**VERIZON**		
9895193781				
	601-9425-43210	TELEPHONE	$40.03	TELEPHONE
	602-9425-43210	TELEPHONE	$40.03	TELEPHONE
	Total for VERIZON		$80.06	
52845	**12/31/2021**	**VICTORY AUTOMOTIVE SERVICE**		
802923				
	651-9425-44040	REPAIRS & MAINT.	$55.29	REPAIRS & MAINT. - EQUIPMENT
802918				
	601-9425-44040	REPAIRS & MAINT.	$76.16	REPAIRS & MAINT. - EQUIPMENT
	Total for VICTORY AUTOMOTIVE SERV		$131.45	
52846	**12/31/2021**	**WHITE BEAR LOCKSMITH**		
33369				
	101-5200-44010	REPAIRS & MAINT.	$246.67	REPAIRS & MAINT. - BUILDINGS
	Total for WHITE BEAR LOCKSMITH		$246.67	
52847	**12/31/2021**	**WILLIAMS SCOTSMAN, INC.**		
9012510057				
	101-3100-44100	RENTALS (EQUIPM	$419.40	RENTALS (EQUIPMENT)
	Total for WILLIAMS SCOTSMAN, INC.		$419.40	

City of Wyoming
Check Detail Register

12-31-2021

Check # / Invoice #	Check Date / General Ledger #	Vendor Name / mount		Comment
52848	**12/31/2021**	**XCEL ENERGY**		
759448139				
	101-3100-43800	UTILITIES-GAS/ELI	$13.05	PARKS
759491813				
	101-3100-43860	STREET LIGHTS	$47.45	STOP LIGHTS
759472840				
	101-3100-43860	STREET LIGHTS	$14.61	STOP LIGHTS
759440453				
	101-3100-43800	UTILITIES-GAS/ELI	$21.60	STREET LIGHTS
759431459				
	101-3100-43800	UTILITIES-GAS/ELI	$12.91	SPEED SIGN
759407038				
	101-3100-43800	UTILITIES-GAS/ELI	$21.08	UNIT LIGHT
760326916				
	602-9425-43800	UTILITIES-GAS/ELI	$1,329.26	LIFT STATIONS
	601-9425-43800	UTILITIES-GAS/ELI	$119.02	WELLHOUSE
760334419				
	101-3100-43800	UTILITIES-GAS/ELI	$1,826.69	PARKS
	101-3100-43860	STREET LIGHTS	$254.30	STOP LIGHTS
	601-9425-43800	UTILITIES-GAS/ELI	$2,705.65	WELLHOUSE
	101-2110-43800	UTILITIES-GAS/ELI	$870.93	POLICE/PUBLIC WORKS
	101-1400-43800	UTILITIES-GAS/ELI	$990.87	CITY HALL
	101-5500-43800	UTILITIES-GAS/ELI	$1,502.58	LIBRARY
	101-5200-43800	UTILITIES-GAS/ELI	$103.92	UTILITIES-GAS/ELEC/SEWER/WATER
	Total for XCEL ENERGY		$9,833.92	
52849	**12/31/2021**	**ZIEGLER INC.**		
IN000360930				
	651-9425-44040	REPAIRS & MAINT.	$39.08	REPAIRS & MAINT. - EQUIPMENT
IN000364305				
	651-9425-44040	REPAIRS & MAINT.	$68.88	REPAIRS & MAINT. - EQUIPMENT
IN000354312				
	651-9425-44040	REPAIRS & MAINT.	$92.08	REPAIRS & MAINT. - EQUIPMENT
IN000366118				
	101-3100-44040	REPAIRS & MAINT.	$24.50	REPAIRS & MAINT. - EQUIPMENT
	Total for ZIEGLER INC.		$224.54	

City of Wyoming
Check Detail Register

12-31-2021

Check # / Invoice #	Check Date / General Ledger #	Vendor Name / mount	Comment

General Checking Account 10100
Total Amount Being Paid: $54,784.81
Total Number of Checks: 45

Mayor Iverson

Councilmember Luger

Councilmember Nanko/Yeager

Councilmember Schilling

Councilmember Ohnstad

City of Wyoming
Check Detail Register

01-04-2022 NYe

Check # / Invoice #	Check Date / General Ledger #	Vendor Name	mount	Comment
52850	**01/04/2022**	**CW TECHNOLOGY**		
CW70362				
	101-1400-42090	NETWORK MUNICI	$3,010.00	MONTHLY SERVICES
	Total for CW TECHNOLOGY		$3,010.00	
52851	**01/04/2022**	**HALLBERG FAMILY LTD**		
01012022				
	101-2110-42100	OPERATING SUPPL	$57.50	OPERATING SUPPLIES
	Total for HALLBERG FAMILY LTD		$57.50	

City of Wyoming
Check Detail Register

01-04-2022 NYe

Check # / Invoice #	Check Date / General Ledger #	Vendor Name / mount	Comment

General Checking Account 10100
Total Amount Being Paid: $3,067.50
Total Number of Checks: 2

Mayor Iverson

Councilmember Luger

Councilmember Nanko/Yeager

Councilmember Schilling

Councilmember Ohnstad

Request for Council Action

Date: December 23, 2021

Presented to: Mayor Iverson and City Council Members
Presented by: Director Chief Neil Bauer
Department: Public Safety
Reference: Disposal of forfeiture Vehicles
Method: Consent Agenda

***Background Information*:**
The Police Department has 1 vehicle which needs to be disposed of through our online public auction process.

1. 2003 Arctic Cat ZL600 Snowmobile, VIN: 4UF03SNW83T155293. TOWED on 01/28/2020 pursuant to a forfeiture. As the provisions for forfeiture have been satisfied and the period for appeal has lapsed, the above vehicle is now a possession of the Wyoming Police Department and available for distribution pursuant to Minnesota Statutes. As the department will not be using the vehicle, it will be auctioned through our public auction process with proceeds directed to the forfeiture fund. Case #20000820

Recommendation:
It is my recommendation that the City Council authorize the disposal of this forfeited vehicle through our online public auction process.

Neil Bauer

Public Safety Director

PUBLIC SAFETY
P.O. Box 188, 7665 Wyoming Trl., Wyoming, MN 55092
Phone: 651-462-0577 Fax: 651-462-0506

RESOLUTION 22-01-06

A RESOLUTION DECLARING A CERTAIN VEHICLE AS SURPLUS PROPERTY FOR DISPOSAL AND AUTHORIZING THE POLICE DEPARTMENT TO DISPOSE OF A VEHICLE THROUGH ONLINE AUCTION

WHEREAS, the City of Wyoming has a policy of impounding vehicles for lawful violations and if unclaimed or forfeited selling said vehicles at auction.

WHEREAS, the Wyoming Police Department has filed the appropriate documents with Chisago County Courts to clear title on the following vehicle so that it may be sold/disposed of.

WHEREAS, the following vehicle is now eligible to be declared surplus property of the City of Wyoming for sale or recycling through an online auction or disposed of as scrap:

Following Vehicle posted on Minnesota State Surplus on-line auction:

- 2003 Arctic Cat ZL600 Snowmobile

NOW THEREFORE, **BE IT RESOLVED BY THE CITY COUNCIL OF THE CITY OF WYOMING, MINNESOTA** authorizes the Police Department to sell/dispose of the vehicle through an Online Auto Auction with the net proceeds to be distributed to the Wyoming Police Department's Impound Lot Fund 202.

ALSO THEREFORE, **BE IT RESOLVED BY THE CITY COUNCIL OF THE CITY OF WYOMING, MINNESOTA,** also authorize the Mayor and the City Administrator to sign the necessary documents to transfer the vehicle from the City to the new owners as required.

ADOPTED BY THE CITY COUNCIL OF THE CITY OF WYOMING THIS 4th Day of January, 2022

CITY OF WYOMING

By: _____
Lisa Iverson, Mayor

ATTESTED:

_____
Robb Linwood, City Administrator/Clerk

RESOLUTION NO. 22-01-07

A RESOLUTION ACCEPTING A DONATION FROM MARANATHA CHURCH TO THE WYOMING FIRE DEPARTMENT

WHEREAS, The City of Wyoming is generally authorized to accept donations of real and personal property pursuant to Minnesota Statutes Section 465.03 for the benefit of its citizens, and is specifically authorized to accept gifts.

WHEREAS, the following persons and entities have offered to donate to the Wyoming Fire Department

Name of Donor	Donation
Maranatha Church	$1,000.00

WHEREAS, The City Council finds it appropriate to accept the donations offered.

THEREFORE, BE IT RESOLVED, The City of Wyoming accepts the donation from Maranatha Church in the amount of $1000.00

HEREUPON SAID RESOLUTION WAS DECLARED DULY PASSED AND ADOPTED THIS 4th DAY OF JANUARY, 2022

CITY OF WYOMING

By:_____
Lisa Iverson, Mayor

ATTEST:

_____
Robb Linwood, City Administrator

Request for Council Action

Date: December 29, 2021

Presented to: Mayor Iverson and City Council Members
Presented by: Robb Linwood, City Administrator
Department: Administration
Reference: City Credit Card Authorization – Neil Bauer – Public Safety Director
Method: Consent Agenda

***Background Information*:**

The City of Wyoming adopted a credit card policy in 2017 with the following purposes:

- Determine the proper use of credit cards to effectively conduct the business of the City as allowed by Minnesota statutes 471.382;
- Designate the City employees authorized to use City credit cards to conduct the business of the City;
- Provide public confidence in the procedures used in public purchasing;
- Ensure fair treatment of all persons who deal with the City procurement system;
- Provide economy and value in City purchasing activities; and
- Provide safeguards for the assurance of a purchasing system of quality and integrity.

Neil Bauer was hired as the new Public Safety Director and started work on December 20, 2021. Staff is requesting authorization for his use of a city credit card. As stated in the policy is it is necessary for the City Council must approve the City employees (responsible person) that will be allowed to use City credit cards consistent with the City's purchasing policy. A current list of all city credit cards, authorized users will be kept on file. Authorized employees and officers will receive, sign and file an acknowledgment form regarding use of City credit cards.

Recommendation: To approve Neil Bauer, Public Safety Director to receive and become an authorized user of a city credit card.

CITY OF WYOMING
P.O. Box 188, 26885 Forest Blvd., Wyoming, MN 55092
Phone: 651-462-0575 Fax: 651-462-0576

December 11, 2021

Robb,

It has been a wonderful winding road over the last four years but due to personal matters it is time for me to step away from the Park Advisory Commission. I wish the Commission all the best in its future. The current Commissioners are a great group of people. I am to the point type person so I will leave at that but if you have any questions of me please feel free to reach out.

Best Regards,

Barb Williams.

Council Report

December 28, 2021

Mayor Iverson and City Council Members

Re: Public Safety Activity Report, January 4, 2022, City Council Meeting

It is my pleasure to provide the following update from Wyoming Public Safety. The last two weeks have been focused on ensuring a smooth transition of the Public Safety Director position from Paul Hoppe to me. We have been reviewing the administrative and technical aspects of the Director position (e.g. budgeting, finance, and records management). This two-week transition period has been incredibly valuable for me. Moving into Q1 2022, my proprieties internally include developing a better understanding of how the department functions and operates, understanding the culture of the department, and building mutually trusting relationships with staff. Some of that will happen informally, but I will also be initiating processes to encourage the development of these objectives. In conjunction with these internal processes, I will be looking to develop an understanding of the Wyoming community and the role of Wyoming Public Safety as engaged members of the community. Accomplishing these objectives early will allow me to better determine what things need to change, and of equal importance, what things need to stay the same.

I had the opportunity engage with the fire department staff prior to their training this week. I appreciate the commitment the paid-on-call firefighters are making to their community and I look forward to meeting with Fire Chief Jesse Milligan on a regular basis to determine how I can support the fire service.

We were recently notified that Wyoming Police Department successfully passed the MN POST Board compliance review in November 2021. The review assessed compliance in three areas:

1. Review POST mandated policies and ensure they include the appropriate content.
2. Determine that all licensed peace officers have received the mandatory training as required by statute.
3. Verify that all peace officers who are not exempt, have or will received training in EVOC/Pursuit driving as mandated by statute.

Our crime analyst is currently conducting a complete audit of all property held at Wyoming. These items include seized contraband, evidence, found property, etc. This process includes physically verifying the location of between 1,100-1,200 items. The next step in the process will be determining what items need to be retained based on the status of the case. Conducting this process now and on an ongoing basis over the next two years will make the relocation process more efficient upon completion of the new public safety building.

PUBLIC SAFETY
P.O. Box 188, 7665 Wyoming Trl., Wyoming, MN 55092
Phone: 651-462-0577 Fax: 651-462-0506

As you know, Paul Hoppe has a long list of accomplishments during his tenure as the Police Chief and Public Safety Director. Through his leadership, he has developed Wyoming Public Safety into a contemporary policing and fire service. He will be missed and I appreciate his vision and contributions to my learning process over the last two weeks.

I am eager and excited to be in this role and I believe the Wyoming community is the right place for me. I look forward to developing our relationship in the coming months.

Neil Bauer
Public Safety Director

PUBLIC SAFETY
P.O. Box 188, 7665 Wyoming Trl., Wyoming, MN 55092
Phone: 651-462-0577 Fax: 651-462-0506

CAD Summary Report

Printed On: 12/28/21 12:45

Wyoming

	12/21	Total
911 Hangup or Open Line	4	**4**
Abandoned Vehicle	1	**1**
ALARM-Commercial	4	**4**
ALARM-Medical	3	**3**
ANIMAL-Animal to Dispatch	1	**1**
ANIMAL-Neglect/Abuse	1	**1**
ASSAULT (in progress)	1	**1**
ASSAULT (not in progress)	2	**2**
Assist Other Agency	12	**12**
Backgrounds/Fingerprints	1	**1**
Burn Permit	1	**1**
Burning Complaint	1	**1**
CHECK-Area	44	**44**
CHECK-Business	95	**95**
CHECK-Park	51	**51**
CHECK-Residence	2	**2**
CHECK-the welfare	1	**1**
Child Dispute/Visitation	3	**3**
Child Protection/Neglect	1	**1**
CRASH-Personal Injury	1	**1**
CRASH-Property Damage ONLY	4	**4**
CRASH-Veh vs Animal (Deer)	1	**1**
Detail/Activities	8	**8**
Disturbance (in progress)	3	**3**
Driving Complaint	7	**7**
FIRE Call	1	**1**
Gopher One emergency locate	1	**1**
Gun Permit	7	**7**
Harassment	1	**1**
Hunting/Fishing/Trapping	1	**1**

CAD Summary Report

Printed On: 12/28/21 12:45

	12/21	Total
Informational ICR	1	**1**
Intoxicated Driver	1	**1**
Intoxicated person	1	**1**
Lift Assist	1	**1**
Mail Tampering	1	**1**
MEDICAL	14	**14**
MI/Psych Issue	1	**1**
Motorist Assist	3	**3**
OFP/HRO/NCO Violation (in progress)	1	**1**
Open Door/Window	2	**2**
Ordinance Violation/Peddler Complaint	1	**1**
Parking Complaint	3	**3**
Public Assist	6	**6**
SQUAD CHECK	25	**25**
Stoparm Violation	1	**1**
Suicidal Person	1	**1**
Suspicious Activity	7	**7**
Suspicious Person	2	**2**
Suspicious Vehicle	10	**10**
THEFT (not in progress)	3	**3**
THEFT-attempted (NOT in progress)	1	**1**
THEFT-OF Vehicle (not in progr	1	**1**
THREATS (not in progress)	1	**1**
Traffic Enforcement/Radar	12	**12**
TRAFFIC Stop	65	**65**
Training	5	**5**
VANDALISM Complaint (not in progress)	1	**1**
Vehicle Lockout	6	**6**
Vehicle Off Road	3	**3**
WARRANT-Attempt	4	**4**

	12/21	Total
Total	**448**	**448**

December 28, 2021
Honorable Mayor and City Council
City of Wyoming
26885 Forest Boulevard
Wyoming, MN 55092

RE: JANUARY 4, 2022 CITY COUNCIL MEETING

Dear Mayor and Council Members:

This letter is intended to summarize on-going commercial building projects and zoning issues within the City. Some of these items may be separate agenda matters, while others are for informational purposes only.

Hallberg RV Storage Site
The floor slab for the two northernmost buildings have been placed. All footings and the foundations for the buildings are in, site grading is near completion.

Hallberg Bingham Site
A grading permit has been applied for; the civil plans will need to be approved before the permit is issued. The building permit application has been submitted.

Wyoming Drug
The final inspections have been approved. This item is closed.

Widseth Office Building
The final inspections have been approved. This item is closed.

Gopher State Mini-Storage
Work is complete on the second storage building. The final grade and hardscaping are still remaining.

Maranatha Radio Tower
The fence surrounding the tower site is partially installed and will be completed by spring.

Planning Commission
The Planning Commission held a public hearing to consider the request of Beckmann Custom Homes, LLC for Preliminary Plat approval of the replatting of the Diamond Ridge subdivision. This is a separate agenda item.

Sincerely,

Frederick E. Weck, IV
Zoning Administrator
Building Official #1825
Advanced Septic Inspector, MPCA #C5199
City of Wyoming

DEPARTMENT OF BUILDING SAFETY
P.O. Box 188, 26885 Forest Blvd., Wyoming, MN 55092
Phone: 651-462-4947 Fax: 651-462-3938

ECKBERG LAMMERS
ATTORNEYS AT LAW

www.eckberglammers.com

Writer's Direct Dial:
(715) 808-8842

Writer's Email:
tloonan@eckberglammers.com

December 29, 2021

Robb Linwood
City of Wyoming
26885 Forest Boulevard
Wyoming, MN 55092

Delivered via Email

Re: ***City of Wyoming***
Status Update for the Period of – December 16, 2021 – December 29, 2021

Dear Robb:

Our office is assisting the City in responding to legal concerns relating to general City matters. We are advising the City on ordinance updates and franchise agreements as well as other questions regarding City contracts and employment matters. We are continuing our general counsel role of fielding questions and addressing general concerns raised by City staff relating to any other legal matters relevant to the City.

Please contact me directly if you have any questions regarding this correspondence. Thank you for allowing us to serve the City of Wyoming.

Very Truly Yours,

s/ Thomas R. Loonan

Thomas R. Loonan
City Attorney

Stillwater Office
1809 Northwestern Avenue
Stillwater, MN 55082
Phone: 651-439-2878
Fax: 651-439-2923

Hudson Office
430 Second Street
Hudson, WI 54016
Phone: 715-386-3733
Fax: 715-386-6456

Engineer's Report

December 30, 2021

Honorable Mayor and City Council
City of Wyoming, MN
26885 Forest Boulevard
Wyoming, MN 55092

Re: January 4, 2022 City Council Meeting
WSB Project No. 015228-000

Dear Mayor and Council Members:

This engineers report is intended to update you on engineering activities within the City since the last council meeting. Some of the items below may be on the agenda with more detailed information provided, while the other items below are for informational purposes only.

2020 Street Improvement Project
The project has been completed. Staff has prepared the final payment voucher and has sent to Dresel Contracting along with a letter outlining the contract closeout documents needed. Staff has just received the signed pay voucher and closeout documents. Staff will review the contract closeout documentation and will place on the 1/18/22 City Council agenda for final payment and acceptance of the improvements. This will start the two-year warranty period.

Diamond Ridge Development
New plans were submitted, however staff had significant concerns with what was proposed. These concerns were related to drainage and flooding of driveways during rainfall events. Staff provided the developer's engineer with some potential solutions such as adding curb and gutter and relocating the stormwater management facilities to the rear of the property rather than consuming the front years and flooding driveways. The developer and developer's engineer have made commitments to make changes necessary to address engineering concerns identified. Staff is confident the adjustments can be made with the existing lot configuration. The edits to the plat would involve the location of the drainage and utility easement for the stormwater management facilities. Staff recommendation to the planning commission and City Council was approval contingent on addressing all engineering comments.

Bingham Property – Hallberg Project
Staff has been working with the project engineer and have provided comments and guidance. Staff has reviewed the applicant's resubmittal and sent comments back to the developers engineer on 12/3/2021 and again on 12/14. Staff is also finalizing the development agreement for this project.

Staff continues to work with the applicant engineer on a few items and are awaiting final plans, bids, and answers to questions to finalize the development agreement. Prior to construction starting, a signed development agreement, signed stormwater maintenance agreement, approved plans, letter of credit, and escrows need to be in place.

East Viking Boulevard (Fenwick to Polaris)
Staff and Council held an informational meeting on 11/2/21 to discuss potential alternatives. Great community feedback was provided. Following the informational meeting, Council provided staff with direction on how to proceed with completion of the feasibility study and grant application. The feasibility study has been finalized and Council received the feasibility study and set the public hearing for January 18th. Staff has scheduled the 3rd public informational meeting for January 12th at 6:00 p.m.

Greenwood Development (Former Golf Course Property)
Staff has finalized the EAW. The EAW is scheduled to be sent to the EQB on 1/4/22 and will be published on 1/11/22. Once published, there is a 30-day comment period, followed by staff preparing responses to comments received. Staff will then bring forward an agenda item that will identify whether any further environmental study/review is necessary.

Staff is working with Chisago County to develop an additional study that will evaluate at a more detailed/comprehensive level to solve traffic issues facing this area. The Chisago County Board recently approved this contract with WSB. Chisago County will utilize that study to begin searching for funds for improvements to this area. It is expected the development will need to participate in costs related to impacts they create with their project. The residential portion of the development can move forward, however the portion of the development that includes the hotel and apartments that takes access near Kettle River Boulevard will require the completion of the Chisago County Study to find the right solution to the traffic concerns this portion of the development brings.

Staff is working closely with the development team as they prepare to begin the preliminary plat on the residential portion of the development.

2021 Street Improvement Project
No new update.
Final street paving has been completed. Restoration and dormant seeding had also been completed. Punch list items will carry forward into the spring of 2022. The assessment Hearing has occurred, and staff certified assessments to Chisago County after the 30-day pre-pay period had elapsed. Once all punch list items have been completed, staff will process the final payment voucher and request all contract closeout documentation. Once the project is accepted, the two-year warranty period will begin.

TH 61 and East Viking Sanitary Sewer Upsizing Project
No new update.
The project is complete with the exception of a few minor punch list items that were not able to be completed this construction season. Once all punch list items have been completed, staff will process the final payment voucher and request all contract closeout documentation. Once the project is accepted, the two-year warranty period will begin.

Summer Fields Development
No new update.
First Addition (19 lots): Improvements are substantially complete through the first layer of asphalt. Staff has developed a punch list that the contractor will be addressing in 2022 prior to the placement of the final layer of asphalt. Once the project is accepted, the two-year warranty period will begin.

Second Addition (15 lots): A grading preconstruction meeting was held on October 11th. Grading has resumed and hauling of excess material from the east side of Kettle River Boulevard to the west side of Kettle River Boulevard, forming an additional 18 lots that have not yet been platted, but are anticipated to form the 3rd Addition. The turn lane on Kettle River Boulevard has been constructed up to the gravel base. Utility construction on the 2nd Addition is planned for the spring of 2022.

Third Addition
The developer has indicated that they may pursue the third addition and work towards final plat so they can begin in the spring on that as well. It will be helpful to have the excess material in the second addition placed in the third addition to allow an early start there as well. The 3rd Addition will involve the design of a City lift station within the site and will require design and ordering of lift station components. An on-site generator will also be required to be installed at the downstream list station. The lead time on this is significant and that information has been provided to the developer to make sure these do not impede the timing of their next phase.

Preserve at Comfort Lake
No new update.
Minor punch list items remain. Once these have been addressed, staff will be ready to recommend acceptance of the improvements and start the two-year warranty period.

Heims Lake Villas North
No new update.
All sanitary sewer, watermain, and storm sewer have been completed. Aggregate base and curb and gutter and first layer of asphalt has recently been completed, allowing building permits to be issued.

Comprehensive Plan
No new update.
Staff has completed the utility sections updates as well as the transportation section for the Planning Commission review. Staff discussed with the planning commission the parks/trails section of the plan and discussed the plan is lacking a clear vision. The planning commission wanted to have the Parks Commission take this up and review. Staff had met to discuss this

further on 6/10 and staff will be providing some recommended action items for consideration in the near future.

Aadland Development (Hunter Hill)
No new update.
The project is now substantially complete with the first layer of asphalt being placed. A project punch list has been provided to the development contractor.

Hallberg Storage
No new update.
Staff has approved the construction plans and a preconstruction meeting has occurred. Excavation of footings and slab for the building have been completed. Site grading is underway.

East Viking Bridge over the Sunrise River
No new update:
Staff met with both Chisago County and Polaris (separately) to discuss the bridge replacement and access while the western access to Polaris is closed. Those meetings went well however Chisago County has asked for a follow up meeting, and we will work to address any potential concerns that come from this meeting. We have indicated that all construction traffic will come from the west and that Polaris is willing to minimize traffic generated from their facility (those that can work from home, will) during that timeframe where access closed from the west.

Past update:
Staff is pleased to share that we have been notified that this project has now been funded for the bridge components. As previously stated, the bridge bonding only covers the actual bridge structure, not the roadway leading to it, or guard rails etc. It is estimated the bonding we have received will offset the City responsibility for this bridge replacement by $268,000. In order to utilize these funds staff is recommending replacement in 2022.

Park System Plan
Staff has been working on the Wyoming Park System Plan. The open house was lightly attended, however we received great feedback during the tree lighting ceremony as well as online feedback.

Thank you for the opportunity to update the council on current matters in the City.

Sincerely,

WSB and Associates, Inc.

Mark A. Erichson

Mark A. Erichson, PE

City Council Report

Mayor Iverson and City Council Members
Public Works Report for January 4th, 2022 Council Meeting
Honorable Mayor Iverson and City Council Members,
Public Works Had 6 snow and ice events in December.
The Hockey Rink has been a great success with attendance reaching a high of 100+ people per day in the Christmas break period.
The VFD in Well #2 has been replaced and the well is back on-line.
Interviews continue for a new Public Works Employee. We have had applicants that are qualified.
Sincerely,
Chuck Almhjeld
Public Works Superintendent

Parks:
Swenson Park hockey has opened and successful.

Sanitary Sewer:
Daily Rounds have been completed.
Lift station contracted work has been scheduled for 2022.

Water:
Daily and monthly water tests have been completed.
Lawn sprinkling ban continues.

Streets:
Tree trimming
Snow plowing continues

Surface Water:
Collecting the Data for the yearly reporting for the MS4 Permit.

WYOMING PUBLIC WORKS
P.O. Box 188, 26490 Faxton Ave. Wyoming, MN 55092
Phone: 651-462-0580 Fax: 651-462-0581

December 30, 2021

Re: 2022 East Viking Boulevard Improvement Project
Fenwick Avenue to Polaris West Access
Wyoming, MN

Dear Property Owner:

The City of Wyoming is continuing work to improve the condition of our roadway infrastructure. Consistent with the City Capital Improvements Plan, the City previously held East Viking Boulevard neighborhood meetings for the improvements between Fenwick Avenue and Glen Oak Drive, to receive feedback from residents on their preference for the improvements. After the last meeting, Council directed staff to complete a feasibility report with the following layout for improvements of East Viking Boulevard:

1) Reconstruct the roadway between Fenwick Avenue and Glen Oak Drive with two traffic lanes, parking lanes on both sides, a sidewalk extended along the entire north side and replacement of existing sidewalk on the south side. This layout is similar to the current roadway layout.
2) Reclamation of the roadway consistent with the existing width from Glen Oak Drive to the West Polaris Access.

City Council Members, staff and consultants will be in attendance to discuss the improvements at a public meeting and want to hear resident preferences. This meeting provides an opportunity for residents to share concerns that they would like addressed as part of the improvements.

The City has scheduled the project informational meeting to be held at City Hall, 26885 Forest Blvd, Wyoming, MN 55092, at 6:00 PM, on Wednesday, January 12, 2022.

The City of Wyoming is also inviting you to a public hearing on the proposed improvements to East Viking Boulevard with the project extending from Fenwick Avenue to the west Polaris access. The City is required by state statute to provide you with the following notice pertaining to the hearing on the improvements for the Project:

NOTICE OF PUBLIC HEARING ON THE
2020 EAST VIKING BOULEVARD IMPROVEMENTS PROJECT

Notice is hereby given that the City Council of Wyoming will meet at the Wyoming City Hall located at 26885 Forest Boulevard, Wyoming, MN, at **7:00 p.m. on Tuesday, January 18, 2022,** to consider the making of the 2022 East Viking Boulevard Improvement Project. The project includes reconstruction of East Viking Boulevard between Fenwick Avenue and Glen Oak Drive, and reclamation of pavement with construction of new surfacing between Glen Oak Drive and the west Polaris access. The project also includes improvements to the sanitary sewer, storm sewer and watermain systems. The proposed improvements are proposed to be assessed in whole or in part to benefitting properties pursuant to Minn. Stat. §§ '429.011 to 429.111. The areas proposed to be assessed are benefiting properties abutting East Viking Boulevard. A map of the proposed assessed properties is included with this letter. The estimated cost of the improvement is $4,371,500. Such persons as desire to be heard with reference to the proposed improvement will be heard at this meeting.

CITY OF WYOMING

P.O. Box 188, 26885 Forest Blvd., Wyoming, MN 55092
Phone: 651-462-0575 Fax: 651-462-3938

If you have questions about the project you are welcome to contact Paul Hornby, Project Manager, at phornby@wsbeng.com or 651.286.8453. In addition, you may contact me at 651.286.8463 with any questions or concerns.

Sincerely,

Mark A. Erichson

Mark Erichson, PE
City Engineer

cc: Robb Linwood, City of Wyoming, MN

PTH/kkp

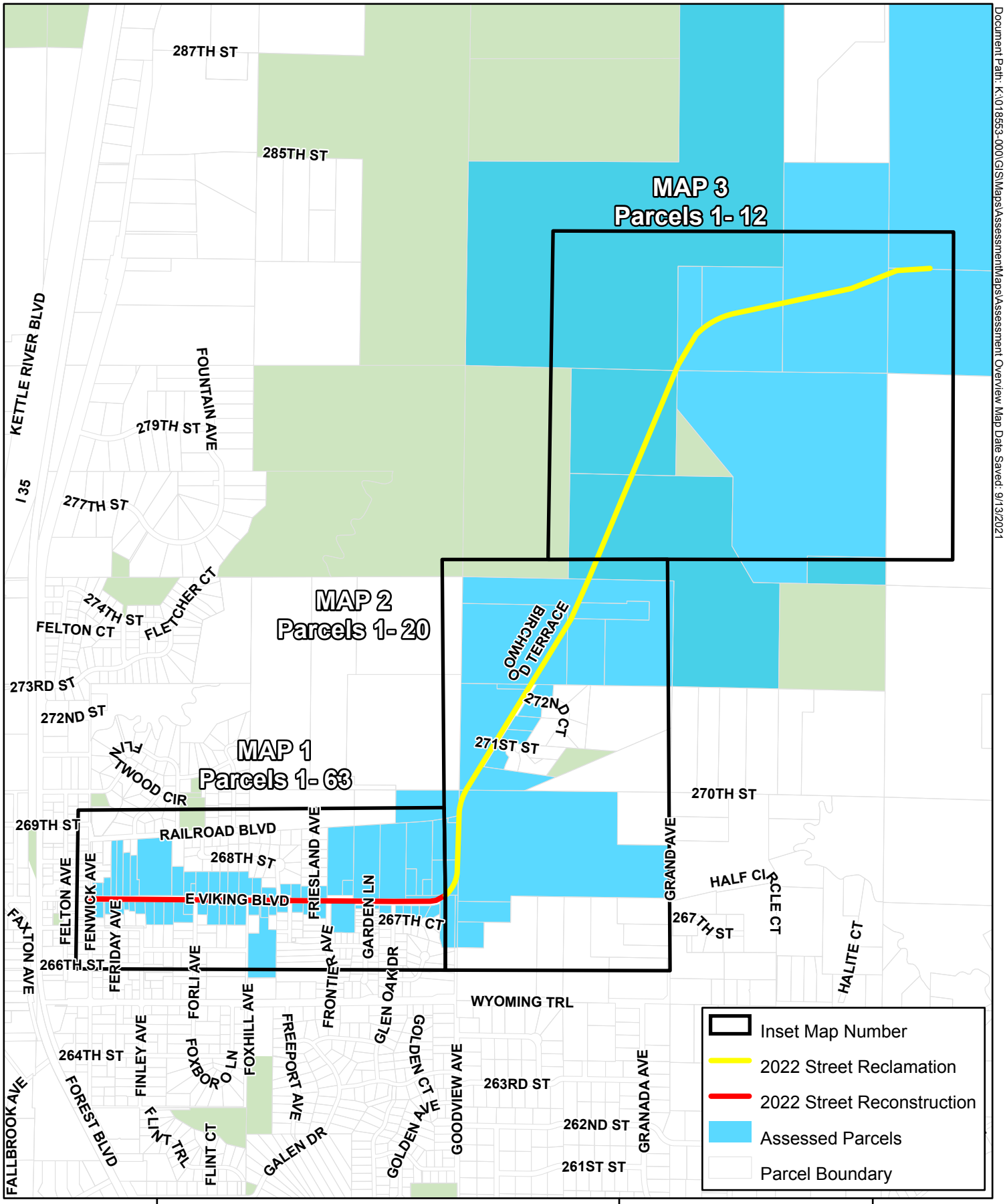

Document Path: K:\018553-000\GIS\Maps\AssessmentMaps\Assessment Overview Map Date Saved: 9/13/2021

Assessment Overview Map

2022 East Viking Boulevard Improvement Project
Wyoming, MN

N

0 1,500 Feet
1 inch = 1,600 feet

wsb

Swenson Park Ribbon Cutting Ceremony

Saturday, January 15 at 2 pm
At Swenson Park

- First ADA compliant park
- Upgraded warming house
- Tennis/Pickleball Courts resurfaced
- New dasher board (hockey board) system for the hockey rink
- New playground equipment
- Accessible sidewalks and ramps
- New LED light installation for the rink

The redesign of the park was funded by a 50/50 matching Minnesota DNR grant of $165,000. Without this, this would not have been possible. Thank you!

CITY OF WYOMING
Minnesota

CITY OF WYOMING
Planning Commission

TO:	**City Council**
FROM:	**Tom Ramler-Olson, City Planner** ***Fred Weck***
MEETING DATE:	**January 4, 2022**
RE:	**Preliminary Plat Review – Replat of Diamond Ridge**
APPLICANT/OWNER:	**Beckmann Custom Homes, LLC**
PROPERTY:	**PID R21.00040.01, R21.00040.02, R21.00040.03, R21.00040.04, R21.00040.05, R21.00040.06**
FILE NO.:	**D-21-010**

In a letter dated December 9, 2021 the applicant has extended the city's MN Statute 15.99 deadline for action on the request until January 19, 2022.

In a letter dated December 2, 2021 the applicant submitted a letter to the Planning Commission and City Council addressing the concerns brought up during the September 28th meeting.

On December 8, 2021 the applicant's engineer submitted new drawings for review by the city engineer. Those drawings with the city engineers comments are included with tonight's meeting packet.

On December 23, 2021 the applicant submitted a letter to the Planning Commission and City Council that, in part, supersedes a portion of the December 2nd letter concerning curb and gutter (it will be incorporated) and asks that the Planning Commission consider their request for preliminary plat approval at their December 28th meeting.

Included with this packet is a letter from the City Engineer dated December 23, 2021 recommending approval of the preliminary plat with the condition that all engineering comments from the City Engineer must be addressed.

Requested Action

Beckmann Custom Homes, LLC ("applicant") is requesting preliminary plat review of a proposed subdivision. The preliminary plat submitted by the applicant shows a three-lot subdivision at the western terminus of 261st Street west of Interstate 35. The property has a combined area of 2.89 acres and contains a wetland to the northwest.

In 2006, this property was platted to have six (6) parcels with right-of-way for an extension of Emerald Ave that would meet 261st Street. In April 2021, the City reviewed a sketch plan of the subdivision which showed ten (10) lots instead of the original six. Between 2006 and this year, rules governing development near wetlands were expanded to require a 20-foot setback from a delineated wetland edge. This change and other issues prompted the latest 3-lot configuration for

the proposed subdivision. Another change with this proposal is the proposed vacation of the right-of-way that accommodates the extension of Emerald Ave. Instead, 261st Street would terminate in a cul-de-sac at the property's eastern edge and have an area of approximately 17,350 square feet or 0.40 acres. The ROW vacation will not be heard until final plat review.

Staff Recommendation

~~Based on analysis against the requirements of Article III, Division 2, of the City of Wyoming Subdivision Ordinance, staff recommends tabling consideration of the proposed preliminary plat. Staff is generally supportive of the three-lot subdivision and the cul-de-sac. However, we recommend delaying consideration until the applicant has satisfactorily addressed all staff comments detailed in the analysis below.~~

Staff is recommending approval of the preliminary plat with the following conditions:

1. *That all engineering comments from the City Engineer must be addressed prior to review of the final plat.*
2. *That De Minimis application be approved prior to review of the final plat.*

(See additional staff recommendations at the end of this report.)

General Staff Review

The following describes the zoning and land use of surrounding properties.

Direction	Subject property is R3, Single Family Residential
North	Undeveloped, wetland
West	Undeveloped, wetland
South	R1, Rural Residential I
East	R3, Single Family Residential

General Comprehensive Plan and Zoning Ordinance Review

Article III of the City of Wyoming Subdivision Ordinance sets forth the platting procedure with the first requirement being the sketch plan. The Applicant previously submitted a sketch plan for City review and comment. Following that review, the Applicant has now advanced to the second step which is preliminary plat.

Comprehensive Plan Designation

The subject property is guided Lower-Density Suburban Neighborhoods in the City's Comprehensive Plan. The Lower-Density Suburban Neighborhoods land use category is described as follows:

"The Lower Density Suburban Neighborhoods Areas are locations that can be subdivided and economically served with either public or private shared wastewater treatment systems. Parcels for single-family housing in the Lower Density Suburban Neighborhoods should be in the range

of 9,000 to 18,000 square feet. These neighborhoods may also include types of housing that have more than one dwelling per building and have an outdoor entrance for each dwelling, such as townhouses."

Lots 1 and 2 have lot areas of 42,800 square feet and 42,322 square feet, respectively; Lot 3 is at about 23,673 square feet. The area of Lot 1 is diminished by the wetland, which consumes about 25,000 square feet, leaving about 18,000 square feet. The area of Lot 2 is also reduced by 3,700 square feet, which is still leaves about 40,000 square feet. Lots 2 and 3 greatly exceed the maximum lot area for the land use category of the project area. However, they will be served by municipal sewer and water.

Zoning

The lots are currently in the Single Family Residential District (R3). The purpose of this district is to establish an area of one-family residential buildings served by public sewer and water lines. The applicant is not proposing a change to the existing zoning district designation.

Unless approved as a PUD, conforming lots in the R3 District are required to have the following minimum dimensional standards:

Existing Zoning District Requirements

Zoning District	Lot Width	Lot Depth	Lot Size	Front Yard Setback	Side Yard Setback	Rear Yard Setback
R3	100 feet (215 on corner lots)	150 feet (not more than 4x the width)	15,000 square feet	30 feet from road ROW	10 feet (principal building)	35 feet (principal building)

The proposed lots meet all R-3 dimensional standards.

Utilities

There is existing watermain and sanitary sewer available within 261st Street to serve the proposed lots. The development is proposing extending the 8-inch watermain and 8-inch sanitary sewer into the cul-de-sac to serve the three proposed lots. A portion of 261st Street will require removal of asphalt pavement with the curb likely be saved. The roadway will require curb to curb pavement section replacement where disturbed by proposed utility construction. This was reflected on previous plans; however it is not shown on the current plan.

Roads and Traffic

The preliminary plat shows 261st Street terminating within the project area as cul-de-sac bulb. Staff is comfortable with the proposed cul-de-sac rather than the road making the through connection. 261st Street is an urban section and they are proposing a rural section for the cul-de-sac which is not a common practice. ~~The applicant is choosing to move forward with the rural section cul-de-sac to likely meet their stormwater requirements given the lack of room for traditional stormwater management practices with an urban section roadway.~~ Staff would like the applicant to evaluate

installing an urban section consistent with the roadways leading into the development. *The applicant has written a letter to the City stating that he will be installing an urban section (curb and gutter).*

Grading

The applicant has not included a grading plan, but rather linework of the swale bottom and side slopes that follow the perimeter of the pond. It appears the swale will carry around the cul-de-sac and discharge into the wetland at the northern portion of the cul-de-sac. If the swale was at 1% grade the swale would be deeper at the outlet side by greater than 2-foot and the linework shown would not be reflective of what the grading would actually look like. The grading plan should also show the outlet swale adjacent to the neighboring property to ensure there are not impacts to this adjacent property. *Revised plans have been submitted.*

Building type (slab on grade, look out, walk out, full basement) should be identified on the grading plan along with appropriate elevations to ensure adequate freeboard is provided from the 100-year high water level of adjacent wetlands. *This has been provided.*

Drainage/Natural Resources/Wetlands

A wetland delineation of the property was approved in 2020. The applicant has submitted a request for a De Minimis exemption to fill 240 square feet of wetland on Lot 1 and for an additional 1,253 square foot non-fill impact to the wetland, also on Lot 1. A condition of approval of the preliminary plat will require that that De Minimis application be approved prior to review of the final plat.

The following is a summary of the drainage requirements. Additional comments on the design of the drainage system are noted on the plans reviewed and will be provided to the applicant.

- The site is outside of Comfort Lake Forest Lake Watershed District (CLFLWD) and does not require a permit through CLFLWD.
- ~~The drainage report has not been submitted meeting the City requirements. The updates to the plans require updating the drainage report to show compliance with the City's Stormwater requirements including:~~
    - ~~A NPDES permit will be required and compliance with all NPDES permit requirements will need to be confirmed.~~
    - ~~Peak discharge rates from each point of site discharge may not increase from the pre-development condition for the 2-, 10-, and 100-year storm events.~~
    - ~~The discharge volume may not increase from the pre-development condition for the 2-year storm event.~~
        - ~~The volume standard must be met with a volume reduction practice (infiltration/water reuse) if feasible onsite.~~
        - ~~If volume reduction practices are not feasible onsite, the applicant may use a different stormwater BMP however the volume conversion factors listed in Table 2.3.2 of the CLFLWD Stormwater Management rules must be applied to calculate the total required volume.~~

- ~~In order to show compliance with water quality requirements, the applicant must demonstrate the BMP is destined to capture the stormwater runoff volume of the 2-year storm event.~~
    - ~~See CLFWD's Stormwater Management rules for order of preference in BMP selection which is adopted by the City.~~
- ~~The lowest building floor elevation must be 2 feet above the 100-year HWL of onsite BMPs.~~
    - ~~Building elevations should be included on the plans to confirm freeboard requirements.~~
- ~~Any proposed storm sewer should be designed for a 10-year rainfall event.~~

- Development is outside of the 100-year floodplain, so there are no floodplain requirements.
- *Revised plans with the City Engineers current comments are included with this report. These drawings do not show the curb and gutter; those revisions were not available at the time of this report.*

Next Steps

After the approval of the preliminary plat, the applicant will need to submit the final plat for consideration. Concurrent with that review will be the request to vacate the ROW that was established to accommodate Emerald Ave.

Planning Commission Recommendations

On September 14, 2021 the Planning Commission publicly heard the applicant's request for preliminary plat approval of the residential subdivision "Re-Plat of Diamond Ridge". After hearing testimony and discussion, the Planning Commission voted unanimously to table the request in order to give the applicant time to address the city engineer's concerns.

On December 28, 2021 the Planning Commission removed the application from the table and voted unanimously to recommend the approval of the requested preliminary plat with the finding of fact that the requirements of Article III, Division 2, "The Preliminary Plat", as contained in the City of Wyoming Subdivision Ordinance have been complied with and with the following conditions:

1. That all engineering comments from the City Engineer must be addressed prior to review of the final plat.
2. That De Minimis application be approved prior to review of the final plat.

Staff is recommending the following additional conditions that were not presented to the Planning Commission:

3. That after the City Engineer has approved the construction plans and specifications; new construction plans that reflect the approved revisions are submitted to the City (three full size and two reduced sets).
4. That all required local, state, and/or federal permitting must be obtained and proof of such permits submitted prior to the pre-construction conference with staff.
5. If By-laws, Property Owner's Association Articles of Incorporation, and/or Protective Covenants are to be established for the lots, said instruments must first be approved by the City Attorney.
6. The Developer must sign the City standard Stormwater Management Facility Maintenance Agreement.

7. Development Agreement, the terms and provisions of which must be approved by the City Attorney, between the property owner, the developer and the city, must be executed prior to construction beginning on the improvements in the development.
8. A surety in the form of a cash deposit or letter of credit guaranteeing to complete the work in substantial compliance with the approved street, utility, grading, and drainage plans. The surety must remain in place until the site work is complete and approved by the city. The City Engineer must approve the surety amount and the City Attorney must approve the terms if a letter of credit is used.

wsb

December 23, 2021

Mr. Fred Weck
Planning and Zoning Administrator and Building Official
City of Wyoming
14669 Fitzgerald Avenue North
Hugo, MN 55038

Re: Preliminary Plat Review
Diamond Ridge – Emerald Avenue
WSB Project No. 016476-000

Dear Mr. Weck:

We have reviewed the most recent plan submittal for the Beckman's Diamond Ridge- Emerald Avenue subdivision prepared by Widseth. Based on review of the documents, we are generally supportive of the preliminary plat from a zoning standpoint. We continue to have concerns with a number of items related to drainage and utilities. Staff has provided the applicant detailed redline comments on the plans that will need to be addressed. The main items are as follows:

1. Stormwater modeling and grading plan reflects driveways being inundated/overtopped with stormwater in the 10-year rainfall events. Roadside drainage along with yard drainage is also directed to drain over the top of driveways (no culverts) as it is routed to the stormwater management facility. This is not acceptable, and the applicant has now agreed to place concrete curb and gutter along the roadway.
2. Staff is confident that the stormwater management for the site can be met. Staff has shared with the applicant's engineer that the stormwater management could easily be accommodated in the rear of lots rather than the front of the lots. There is already a proposed storm sewer outlet extending between these lots and therefore not a cost factor.

The items noted above will likely change the location of the drainage and utility easements, but not the lot configuration. The applicant is also working to address other comments related to the sewer and water that will be extended to serve the three homes and will not impact the preliminary plat. For these reasons, staff is comfortable with preliminary plat approval with a condition that all engineering comments from the City Engineer must be addressed.

Thank you for the opportunity to provide comments on this project. Additional comments may be necessary following the review of the responses to these. If you have any questions, please do not hesitate to contact me at 651-286-8463.

Sincerely,

WSB

Mark A. Erichson

Mark Erichson, PE
City Engineer

Beckmann Custom Homes, LLC
PO Box 126
Andover, Mn 55304
Beckmanncustomhomes@gmail.com
Project: Diamond Ridge – Emerald Avenue, Wyoming, MN
Project location: 261st St. & Emerald Avenue, Wyoming, MN

12-23-2021

Planning Commission & Council Members
City of Wyoming
26885 Forest Boulevard
Wyoming, MN 55092

We, Beckmann Custom Homes, are writing today regarding the submittal of our 3 home/cul-de-sac, 2.89 acre development plan referred to as "Diamond Ridge – Emerald Avenue" located at 261st Street & Emerald Avenue in Wyoming, MN.
Moving forward it is our intent to install curb & gutter into the proposed cul-de-sac in order to accommodate the water from a 100 year storm event. In addition to addressing the 100 year storm water management, the re-engineering will also be addressing all other comments from the review of City engineer, Mark Erichson, submitted to Widseth Engineering via e-mail on December 22nd, 2021.
We ask that the City please keep our project on the agenda for the December 28th, 2021 meeting, with the hopes of getting an approval for a preliminary plat subject to the changes reflecting the city comments given on December 22nd, 2021. These re-engineering details will be completed, but given the holidays, vacations and timings, it will not be completed before the December 28th, 2021 meeting.

Thank you for your time & attention to this matter.
Happy Holiday's,

Charles L Beckmann

Charles Beckmann & Kathryn Boyd
Beckmann Custom Homes, LLC

Beckmann Custom Homes, LLC
PO Box 126
Andover, Mn 55304
Beckmanncustomhomes@gmail.com
Project: Diamond Ridge – Emerald Avenue, Wyoming, MN
Project location: 261st St. & Emerald Avenue, Wyoming, MN

12-2-2021

Planning Commission & Council Members
City of Wyoming
26885 Forest Boulevard
Wyoming, MN 55092

To whom it may concern at the City of Wyoming,
We, Beckmann Custom Homes, are writing today regarding the submittal of our 3 home/cul-de-sac, 2.89 acre development plan referred to as "Diamond Ridge – Emerald Avenue" located at 261st Street & Emerald Avenue in Wyoming, MN.
We are resubmitting our previous development plan for the Emerald Avenue Project. The previously submitted plan meets the preliminary plat requirements set forth by the City of Wyoming, and has been edited, redrafted and reengineered many times over based upon review and comments from the City of Wyoming.
Based upon previous meetings, the City of Wyoming has three main items they would like addressed and modified pertaining to our previously submitted plan: Curb and gutter, a pathway through the property, and Stormwater Management. The following is a list of the three topics of discussion brought up by the city. The list has been summarized, with our responses listed afterward:

Superseded by 12/23/21 Letter

1. ~~Topic of Discussion: Curb & Gutter~~
   ~~Wyoming: Add curb & gutter to the proposed cul-de-sac~~
   ~~Beckmann: If curb & gutter were to be installed it would involve many starts, stops, ups, and downs in the curb due to the installation of the three driveways and several openings for stormwater drainage. After all of the openings are made, there will not be the curb & gutter look that we believe is being envisioned upon making the request of the addition. We feel there is no benefit to curb and gutter installation, and that the currently designed stormwater removal system is the optimal solution for a cul-de-sac such as the size we are proposing.~~

2. Topic of Discussion: Pathway
   Wyoming: The City of Wyoming is requesting that we install a walking path between proposed lots 2 and 3 of the development (The middle and Eastern most lot of the three proposed lots). The purpose of the pathway would be to provide access for pedestrians looking to come and go between Emerald Avenue and 261st Street.
   Beckmann: There are many points of question and concern that arise when we consider the installation of a walking path. The following listed are just a few:

A) Concerns with the path going from asphalt street to sand/gravel cul-de-sac. For example: Snow plow damage.

B) Who will maintain the path? Such as mowing, snow removal, damage repair??

C) Would the city construct the pathway in the easement?

To summarize the feelings of Beckmann Custom Homes on this topic of discussion: We have considered the proposal of installing a pathway, and have decided that if there is not a code, rule or regulation in place requiring the owner to install said mentioned path, then we kindly decline.

Topic of Discussion: Stormwater Management
Wyoming: The ordinances require treatment for a 100-year storm.
Beckmann: We have had Widseth Engineering re-design for the 100 year storm water management. Tim Houle will be re-submitting.

To summarize, we are resubmitting our plan with the hope that you take time to consider our thoughts, comments, and perspective. We hope to start moving forward toward building three homes on the cul-de-sac.

Thank you,

Charles L Beckmann

Charles L Beckmann
Beckmann Custom Homes, LLC

Beckmann Custom Homes, LLC
PO Box 126
Andover, Mn 55304
Beckmanncustomhomes@gmail.com
Project: Diamond Ridge – Emerald Avenue, Wyoming, MN
Project location: 261st St. & Emerald Avenue, Wyoming, MN

12-09-2021

Planning Commission & Council Members
City of Wyoming
26885 Forest Boulevard
Wyoming, MN 55092

To whom it may concern at the City of Wyoming,
We, Beckmann Custom Homes, are writing today regarding the submittal of our 3 home/cul-de-sac, 2.89 acre development plan referred to as "Diamond Ridge – Emerald Avenue" located at 261st Street & Emerald Avenue in Wyoming, MN.
In accordance with MN Statute 15.99, Subdivision 3 (g). We are granting to the City of Wyoming an extension to the time limit to consider my request for preliminary plat approval of the Diamond Ridge subdivision until the date of January 19th, 2022.

Thank you,

Charles L Beckmann
Beckmann Custom Homes, LLC

City Of Wyoming
26885 Forest Blvd., PO Box 188
Wyoming, MN 55092
Phone (651) 462-4947 Fax (651) 462-3938

PRELIMINARY PLAT SUBDIVISION APPLICATION

A Preliminary Plat Application is filed after the Planning Commission has reviewed the Sketch Plan Application for the proposed subdivision. The application is reviewed by the Plat Review Committee and then forwarded on to the Planning Commission for a public hearing. After the public hearing the application is considered by the City Council.

Applicant(s): Name(s) Beckmann Custom Homes, LLC
Address 15827 Madison St. NE
City Ham Lake State MN Zip 55304
Work and home phone numbers 612-599-6141 Email Beckmanncustomhomes@gmail.com

Owner(s): (if other than Applicant(s)) - Same as Applicant
Name(s) _____
Address _____
City _____ State _____ Zip _____
Work and home phone numbers _____ Email _____

Signature of owner(s) _____ Date _____

Legal description of property: Proposed Replat of Diamond Ridge - part of SW 1/4 of Sec. 19, T. 33N, R 21W
Property Identification Number R.21. Not Assigned Yet

Present use of property: Unimproved

Proposed use of property: Single Family Residential

Present zoning of property: R3 Single Family Residential

Total acreage of property: 2.89 acres (3 lots and R/W) + 56.16 acres (outlot)

Total acreage in wetlands or floodplain: 0.66 acres wetland (lots) + 56.16 acres wetland (outlot)

Number of proposed lots: 3 Lots

Acreage of proposed parkland dedication: 0 acres

__11 full size copies of the proposed preliminary plat.

__2 reduced copies (no larger than 11 X 17).

__A copy of proposed protective covenants, if applicable.

__Grading, drainage and erosion control plans.

__Septic site evaluation reports.

__Wetlands delineation report.

__Applications for any necessary variances, conditional use permits, or rezoning.

__Copies of permit application submittals to all agencies with jurisdiction over wetlands or water bodies and channels on the development site.

__ List of any special assessments.

__Environmental Assessment Worksheet, if necessary.

Signature of Applicant(s) Charles L Beckmann Date 8-23-21

As the applicant for this request, I agree to reimburse the City for all expenses incurred by the City in employing planning, engineering, legal, and other professional consultants in reviewing this application. This may include the replenishment of any escrow funds as required as part of this application. Such costs shall be paid by me, the applicant, regardless of the outcome of the review and prior to commencing any work on the project.

A public hearing can be scheduled only after a complete application has been received.

****

Application # D-21-010 OFFICE USE ONLY Date Application Received 8/23/21

Date Complete Application Received 8/23/21 120 Days 12/21/21 By: [illegible] Official

$450.00 + $70.00/Lot + Consultant Escrow = Total _____ Date Paid 8/23/21 Check # —

Consultant Escrow $1,000.00 without improvements; $10,000.00 with improvements + $500.00 per lot for 30 or more lots.

Z:\WEBSITE\2018 WEBSITE REBOOT\ZONING APPLICATIONS\SUBDIVISION APPLICATION\2 PRELIMINARY PLAT APP 18.DOCX revised 12/06/18

Applicant extended to 1/19/2022

Diamond Ridge 2006 Plat

0 25 50 100 ft

Date: 12/29/2021
Time: 9:42:53 AM

These data are provided on as "AS-IS" basis, without warranty of any type, expressed or implied, including but not limited to any warranty as to their performance, merchantability, or fitness for any particular purpose.

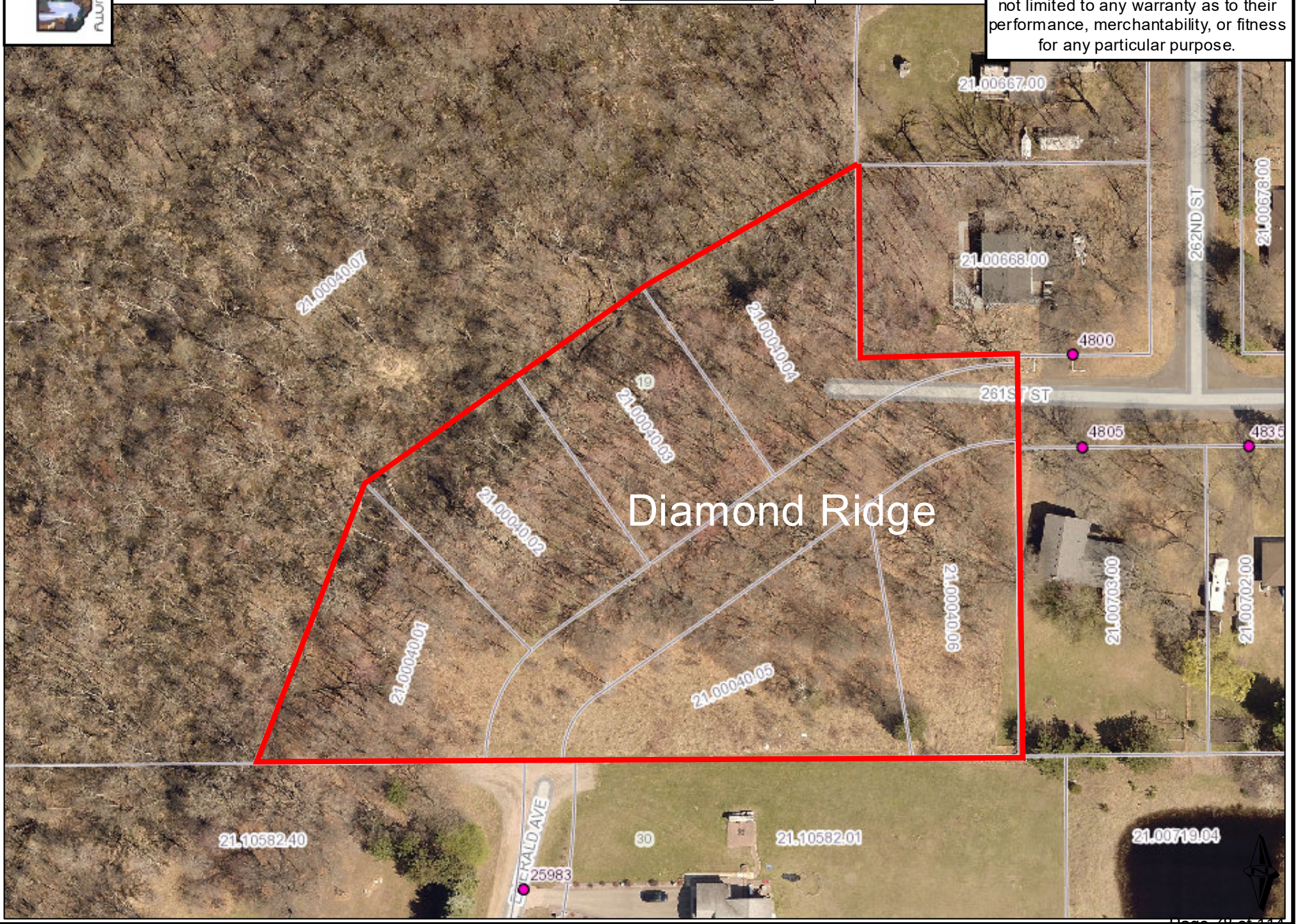

PRELIMINARY PLAT
RE-PLAT OF DIAMOND RIDGE

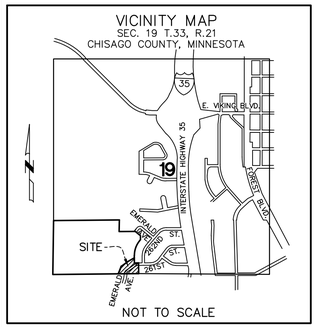

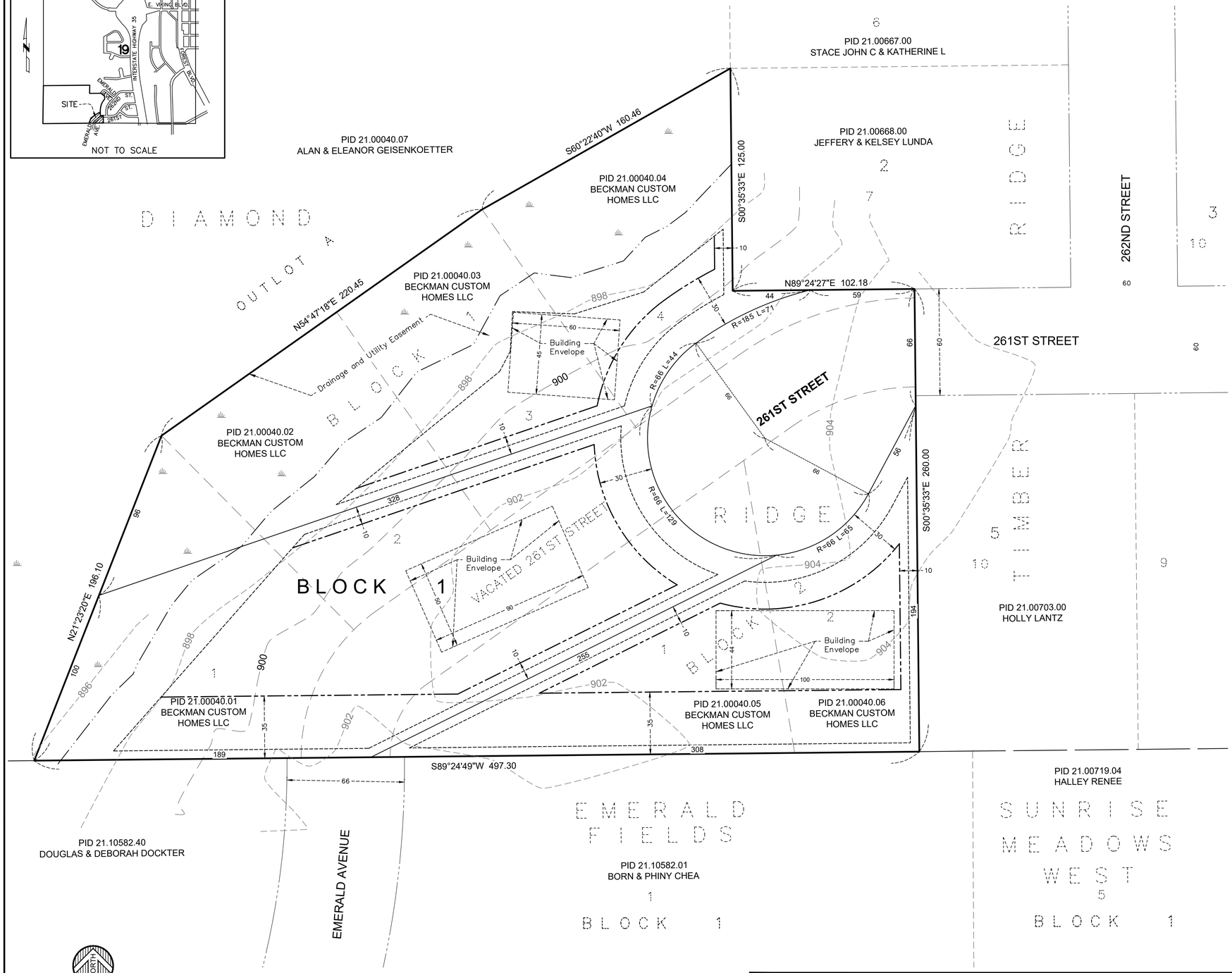

PROPERTY DESCRIPTION:

Lots 1, 2, 3 and 4, Block 1 and Lots 1 and 2 Block 2, DIAMOND RIDGE according to the plat thereof Chisago County, Minnesota, and vacated 261st Street in said plat.

SURVEY NOTES:

1. Orientation of this bearing system is based on the Chisago County Coordinate System NAD83 (1996 adj.)
2. No address has been assigned to these properties.
3. Existing Total Acreage: = 126,145 Sq. Ft. or 2.89 Acres
4. Proposed Lot Area Summary:
   Lot 1, Block 1: 42,800 Sq. Ft. or 0.98 Acres - Buildable Area = 6,573 Sq. Ft. or 0.15 Acres
   Lot 2, Block 1: 42,322 Sq. Ft. or 0.97 Acres - Buildable Area = 22,768 Sq. Ft. or 0.52 Acres
   Lot 3, Block 1: 23,673 Sq. Ft. or 0.54 Acres - Buildable Area = 8,031 Sq. Ft. or 0.18 Acres
   Dedicated Right of Way: 17,350 Sq. Ft. or 0.40 Acres
5. Property zoned as (R-3) Single Family Residential, (per City of Wyoming Zoning Map)
   Minimum Requirements:(per City of Wyoming City Code)
   Lot Size: 15,000 Sq. Ft.
   Lot Depth: 150 Feet
   Lot Width: 100 feet at building setback line
6. Building Setbacks (per of City of Wyoming City Code)
   Front Yard Regulations: 30 feet from right of way
   Side Yard Regulations: Principal Building/Accessory Building/Driveway =10 feet/3 feet/5 feet
   Rear Yard Regulations: Principal Building/Accessory Building = 35 feet/3 feet
7. Elevations shown are per the NAVD88 datum.
   Benchmark: MnDOT Geodetic Monument 1380 BT- Elev=911.18 NAVD88
8. The subject property lies within Zone X, areas of determined to be outside the 0.2% annual chance floodplain. per FEMA Flood Insurance Rate Map No. 27025C0350D, Community No. 270076, effective date April 17, 2012.

OWNER
BECKMANN CUSTOM HOMES LLC
PO BOX 126
ANDOVER, MN 55304
612-599-6141

SURVEYOR/ENGINEER
WIDSETH
P.O. BOX 37
FOREST LAKE, MINNESOTA 55025
(651) 464-3130

WETLAND SPECIALIST
WIDSETH
610 FILMORE ST.
ALEXANDRIA, MINNESOTA 55308
(320) 762-8149

LEGEND

- WETLAND SYMBOL
- LOT LINE
- RIGHT OF WAY EXISTING
- BOUNDARY LINE
- SECTION LINE
- LOT LINE PROPOSED
- EASEMENT LINE
- EDGE OF DELINEATED WETLAND
- BUILDING SETBACK LINE

DRAINAGE AND UTILITY EASEMENTS ARE SHOWN THUS:

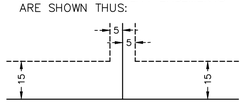

BEING 5 FEET IN WIDTH, UNLESS OTHERWISE INDICATED, AND ADJOINING LOT LINES, AND 15 FEET IN WIDTH AND ADJOINING STREET LINES, AS SHOWN ON THIS PLAT.

DATE:	August 23, 2021
SCALE:	AS SHOWN
DRAWN BY:	SLD
CHECKED BY:	SK
FILE NUMBER:	2020-10572

DATE	AMENDMENTS	BY

PREPARED FOR: **BECKMANN CUSTOM HOMES LLC**

I HEREBY CERTIFY THAT THIS SURVEY, PLAN, OR REPORT WAS PREPARED BY ME OR UNDER MY DIRECT SUPERVISION AND THAT I AM A DULY LICENSED LAND SURVEYOR UNDER THE LAWS OF THE STATE OF MINNESOTA.

Shawn M. Kupcho L.S. DATE: 8/23/21 LIC. NO. 49021

WIDSETH
ARCHITECTS ▪ ENGINEERS ▪ SCIENTISTS ▪ SURVEYORS

DIAMOND RIDGE - EMERALD AVENUE

WYOMING, MN

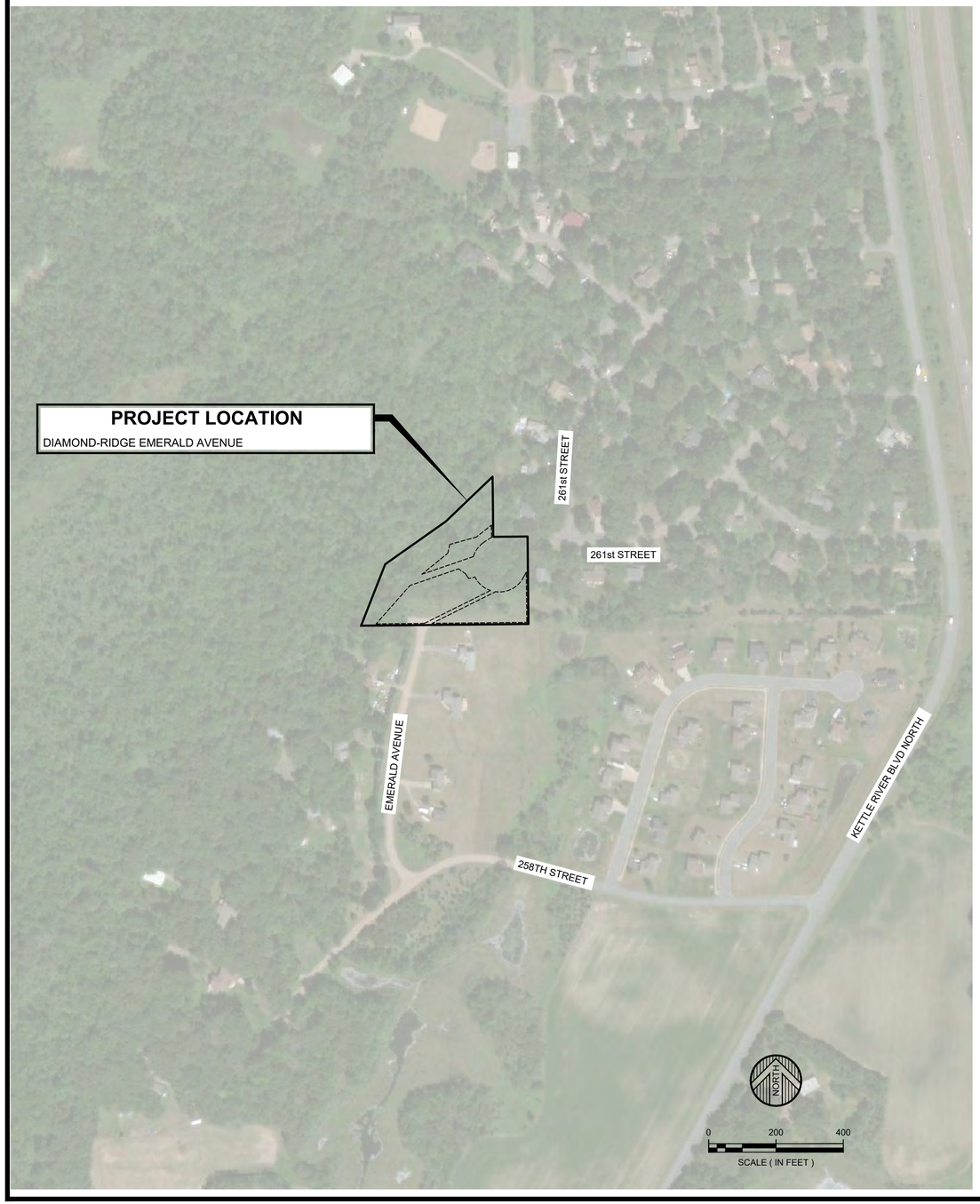

CITY OFFICALS

MAYOR
LISA IVERSON
CITY COUNCIL MEMBERS
LINDA NANKO YEAGER CLAIRE LUGER BRETT OHNSTAD DENNIS SCHILLING
PUBLIC WORKS SUPERINTENDENT
CHUCK ALMHJELD
CITY ADMINISTRATOR
ROBB LINWOOD

GOVERNING SPECIFICATIONS

THE 2020 EDITION OF THE MINNESOTA DEPARTMENT OF TRANSPORTATION "STANDARD SPECIFICATIONS FOR CONSTRUCTION" AND THE 2018 EDITION OF THE "MATERIALS LAB SUPPLEMENTAL SPECIFICATIONS FOR CONSTRUCTION" SHALL GOVERN.

SHEET INDEX TABLE

SHEET NUMBERS	SHEET TITLE
C1.0	TITLE SHEET
C2.0	CIVIL PLAN LEGEND
C3.0-C3.2	DETAILS
C4.0-C4.1	STORMWATER POLLUTION PREVENTION PLAN (SWPPP)
C5.0	EXISTING CONDITIONS AND REMOVALS
C6.0	SITE PLAN
C7.0	GRADING PLAN
C8.0	EROSION CONTROL PLAN
C9.0	UTILITY PLAN

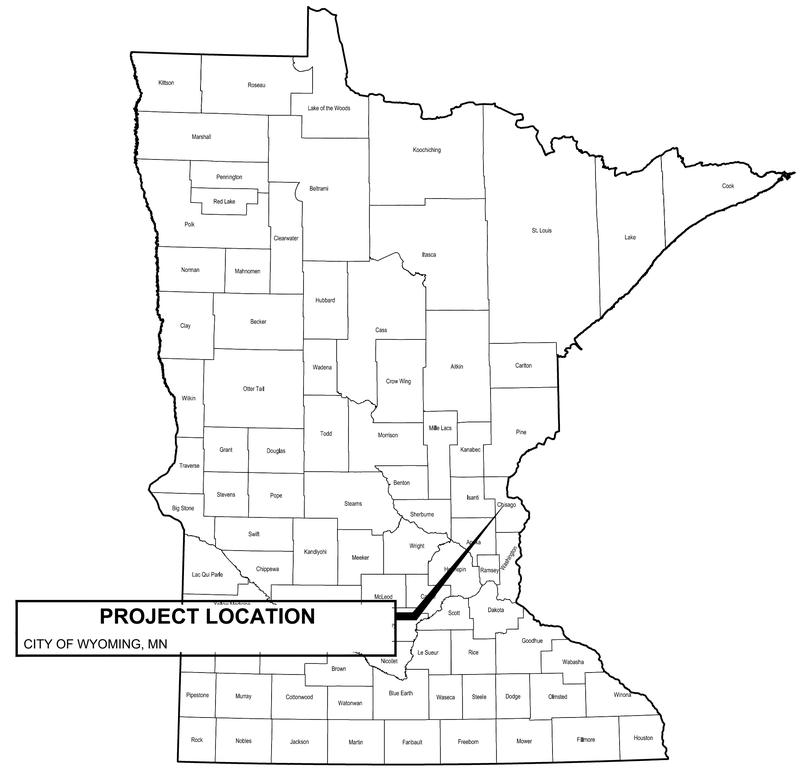

WIDSETH
ARCHITECTS • ENGINEERS • SCIENTISTS • SURVEYORS

I HEREBY CERTIFY THAT THIS PLAN, SPECIFICATION, OR REPORT WAS PREPARED BY ME OR UNDER MY DIRECT SUPERVISION AND THAT I AM A DULY LICENSED PROFESSIONAL ENGINEER UNDER THE LAWS OF THE STATE OF MINNESOTA.

TIMOTHY M. HOULE DATE: 09/24/2021 LIC. NO. 25132

DATE	REV#	REVISIONS DESCRIPTION	BY
11/06/2020		ADDRESS CITY COMMENTS	ADB
12/08/2021		ADDRESS 100-YR STORM	

DATE: AUGUST 2021
SCALE: AS SHOWN
DRAWN BY: ERC
CHECKED BY: TMH
JOB NUMBER: 2020-10572

DIAMOND RIDGE - EMERALD AVENUE
BRINKMANN CUSTOM HOMES
WYOMING, MN

TITLE SHEET

SHEET NO.
C1.0

J:\Beckmann Custom Homes-44746\2020-10572\CADD\Civil\C-TS-2020-10572.dwg Plotted by:Joshua Rebennack 12/8/2021 2:24:53 PM

© 2021 WIDSETH

SURVEY MONUMENTS

- BENCH MARK
- FOUND CIM
- FOUND CPNT.
- FOUND JLM
- FOUND LATH
- FOUND PIPE
- FOUND READING
- STAKED CIM
- STAKED CPNT.
- STAKED JLM
- STAKED PIPE

EXISTING TOPO SYMBOLS

- AC UNIT
- FENCE POST
- FLAG POLE
- GUARD POST
- GUY ANCHOR
- GUY POLE
- HANDICAP SYMBOL
- MAILBOX
- SHRUB
- SIGN DOUBLE POST
- SIGN SINGLE POST
- TREE CONIFER
- TREE DECIDUOUS
- TREE STUMP
- TV DISH
- WETLAND SYMBOL
- YARD LIGHT

EXISTING UTILITY MUNICIPAL SYMBOLS

- APRON
- LIFT STATION
- SANITARY CLEANOUT
- SANITARY MANHOLE
- STORM CATCH BASIN
- STORM INLET

EXISTING UTILITY MUNICIPAL SYMBOLS (cont.)

- STORM MANHOLE
- WATER CURB STOP
- WATER HANDHOLE
- WATER HYDRANT
- WATER MANHOLE
- WATER METER
- WATER VALVE
- WATER WELL
- UTILITY SIZE & TYPE

EXISTING UTILITY PRIVATE SYMBOLS

- ELEC GROUND LIGHT
- ELEC HANDHOLE
- ELEC LIGHT POLE
- ELEC MANHOLE
- ELEC METER
- ELEC PEDESTAL
- ELEC POLE
- ELEC SIGNAL
- ELEC TRANSFORMER BOX
- GAS METER
- GAS VALVE
- LP TANK
- TELE HANDHOLE
- TELE MANHOLE
- TELE PEDESTAL
- TELE POLE
- TV HANDHOLE
- TV PEDESTAL

SOIL BORING SYMBOLS

- LASER-INDUCED FLUORESCE BORING
- LYSIMETER
- MONITOR WELL
- PERC TEST
- PIEZOMETER
- RECOVERY WELL
- SOIL BORING
- SOIL VAPOR POINT
- VAPOR SURVEY POINT

PROPOSED UTILITY MUNICIPAL SYMBOLS

- APRON PROPOSED
- SANITARY CLEANOUT PROPOSED
- SANITARY LIFT STATION PROPOSED
- SANITARY LIFT STATION VALVE MANHOLE PROPOSED
- SANITARY MANHOLE PROPOSED
- SANITARY PLUG PROPOSED
- STORM CATCH BASIN PROPOSED
- STORM MANHOLE PROPOSED
- WATER 11 1/4° BEND PROPOSED
- WATER 22 1/2° BEND PROPOSED
- WATER 45° BEND PROPOSED
- WATER 90° BEND PROPOSED
- WATER CAP PROPOSED
- WATER CROSS PROPOSED
- WATER CURB STOP PROPOSED
- WATER HYDRANT PROPOSED
- WATER REDUCER PROPOSED
- WATER SLEEVE PROPOSED
- WATER TEE PROPOSED
- WATER VALVE PROPOSED

PROPOSED UTILITY PRIVATE SYMBOLS

- ELEC LIGHT POLE PROPOSED

EROSION CONTROL SYMBOLS

- SURFACE DRAINAGE ARROW
- STORM DRAIN INLET PROTECTION

TRAFFIC CONTROL DEVICES & SYMBOLS

- TRAFFIC CONTROL SIGN (1 POST)
- TRAFFIC CONTROL SIGN (2 POST)
- TYPE III BARRICADE
- DRUM CHANNELIZER
- FLASHING ARROW OR MESSAGE BOARD

EXISTING TOPOGRAPHIC LINES

- CENTER LINE
- EDGE OF WOODS
- FENCE BARB WIRE
- FENCE CHAIN LINK
- FENCE WOOD
- FORCEMAIN
- OVERHEAD CABLE TV
- OVERHEAD ELECTRIC
- OVERHEAD TELE
- RAILROAD
- RETAINING WALL
- SANITARY SEWER
- SANITARY SEWER SERVICE
- STORM SEWER
- STORM SEWER DRAIN TILE
- UNDERGROUND CABLE TV
- UNDERGROUND ELECTRIC
- UNDERGROUND FIBER OPTIC
- UNDERGROUND GAS
- UNDERGROUND TELE
- WATERMAIN
- WATERMAIN SERVICE
- WETLAND EDGE

R/W, LOT & EASEMENTS LINES

- BUILDING SETBACK LINE
- LOT LINE PROPOSED
- EASEMENT LINE
- EASEMENT LINE PROPOSED
- LOT LINE
- MNDOT CONTROLLED ACCESS LINE
- RIGHT OF WAY EXISTING
- RIGHT OF WAY PROPOSED

PROPOSED CONSTRUCTION LINES

- FENCE CHAIN LINK PROPOSED
- FENCE WOOD PROPOSED
- FENCE BARB WIRE PROPOSED
- FORCEMAIN PROPOSED
- SANITARY SEWER PROPOSED
- SANITARY SERVICE PROPOSED
- STORM SEWER PROPOSED
- STORM SEWER DRAIN TILE PROPOSED
- WATERMAIN PROPOSED
- WATERMAIN SERVICE PROPOSED

EROSION CONTROL LINES

- BALE CHECK
- BIO ROLL
- SILT FENCE
- SILT FENCE TYPE HEAVY DUTY
- SILT FENCE TYPE MACHINE SLICED
- SILT FENCE TYPE PREASSEMBLED
- FLOTATION SILT CURTAIN

HATCH PATTERN AND SHADING LEGEND

- RANDOM RIPRAP
- SOD
- SEED
- HYDRAULIC STABILIZER
- EROSION CONTROL BLANKET
- TEMP. ROCK CONSTRUCTION ENTRANCE
- BUILDING WALL HATCH
- BITUMINOUS SURFACE
- CONCRETE SURFACE
- GRAVEL SURFACE
- EASEMENT PATTERN

DOCUMENTATION SYMBOLS

A / 2A — SECTION ARROW - SECTION NUMBER TOP; PAGE OF SECTION BOTTOM

J:\Beckmann Custom Homes-44746\2020-10572\CADD\Civil\C-LG-2020-10572.dwg Plotted by:Joshua Rebennack 12/8/2021 2:25:01 PM

© 2021 WIDSETH

WIDSETH
ARCHITECTS ▪ ENGINEERS ▪ SCIENTISTS ▪ SURVEYORS

I HEREBY CERTIFY THAT THIS PLAN, SPECIFICATION, OR REPORT WAS PREPARED BY ME OR UNDER MY DIRECT SUPERVISION AND THAT I AM A DULY LICENSED PROFESSIONAL ENGINEER UNDER THE LAWS OF THE STATE OF MINNESOTA.

TIMOTHY M. HOULE DATE: 09/24/2021 LIC. NO. 25132

DATE	REV#	REVISIONS DESCRIPTION	BY
12/08/2021		ADDRESS 100-YR STORM	

DATE: AUGUST 2021
SCALE: AS SHOWN
DRAWN BY: ERC
CHECKED BY: TMH
JOB NUMBER: 2020-10572

DIAMOND RIDGE - EMERALD AVENUE
BRINKMANN CUSTOM HOMES
WYOMING, MN

CIVIL PLAN LEGEND

SHEET NO.
C2.0

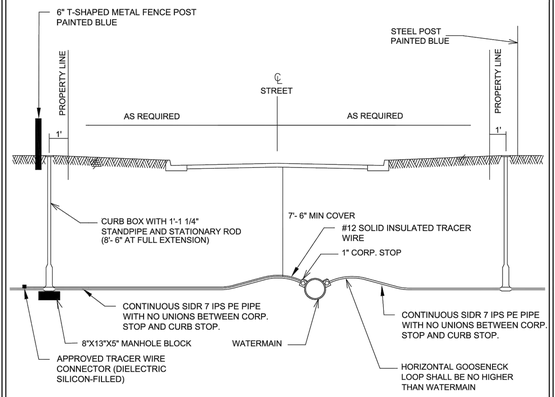

NOTES:
1. CURB BOXES INSTALLED IN AREAS WHERE BOULEVARD IS TO BE CUT AT A LATER DATE SHALL BE INSTALLED AT DEPTH REQUIRED, CURB BOX EXTENTION FOR BOXES EXCEEDING 7.5' IN LENGTH ARE TO BE BID AT CONTRACT PRICE AND SHALL INCLUDE STACK COUPLINGS, CONNECTIONS, ETC.
2. CURB BOXES LOCATED IN DRIVEWAYS, WALKS OR PARKING LOTS SHALL UTILIZE THE FORD MINNEAPOLIS PATTERN CURB BOXES A-1 OR CITY APPROVED EQUIVALENT.
3. CORP. STOPS SHALL BE FORD BALLCORP FB600-4 AND CURB STOPS SHALL BE FORD BALL VALVE B22-444M OR CITY APPROVED EQUIVALENT.
4. TYPICAL WATER SERVICE 1" TO 2 1/2" POLYETHYLENE (AS DIRECTED BY THE ENGINEER.

Wyoming	TYPICAL WATER SERVICES FOR WATERMAIN	Special Details Date: 03-01-10 Revised: 03-16-20	WY-W-2

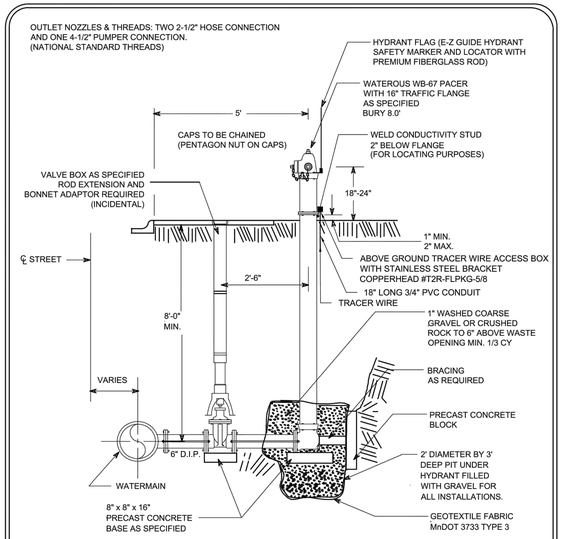

NOTES:
1. HYDRANT COATINGS DAMAGED DURING CONSTRUCTION SHALL BE REPAIRED AFTER THE BASE COURSE OF BITUMINOUS IS INSTALLED. PRIME AND PAINT HYDRANTS PER AWWA AND MANUFACTURER'S STANDARDS.
2. ALL HYDRANT LEADS SHALL BE TIED WITH 3/4" TIE RODS. TIE ROD SHALL EXTEND FROM TEE TO VALVE AND VALVE TO HYDRANT. MEGA LUGS MAY BE USED IN LIEU OF TIED RODS.
3. HYDRANTS SHALL HAVE A 16" BREAK OFF TRAFFIC FLANGE.
4. ALL RODS AND RETAINERS TO BE COATED WITH BITUMASTIC.
5. YELLOW "OUT OF ORDER" TAG TO BE INSTALLED ON THE PUMPER CONNECTIONS AFTER BACKFILL.
6. THE INITIAL & FINAL RAISING OF VALVE BOXES SHALL BE CONSIDERED INCIDENTAL TO THE PROJECT.
7. ALL WATERMAIN BOLTS SHALL BE CORE-BLUE OR APPROVED EQUAL.

Wyoming	TYPICAL HYDRANT INSTALLATION	Special Details Date: 03-01-10 Revised: 03-16-20	WY-W-1

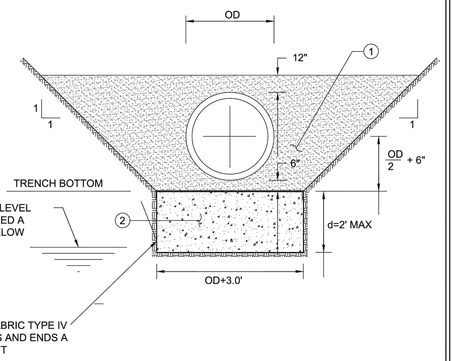

1. GRANULAR PIPE BEDDING MATERIAL (MNDOT SPEC 3149.2F) (INCIDENTAL)
2. 1½" CLEAR AGGREGATE BEDDING. TO BE USED ONLY IN AREAS AS DIRECTED BY ENGINEER. (NO PAYMENT WILL BE MADE WITHOUT PRIOR APPROVAL FROM THE ENGINEER). GEOTEXTILE FABRIC TYPE IV CONSIDERED INCIDENTAL.

Wyoming	PVC PIPE BEDDING DETAIL	Special Details Date: 02-18-15 Revised: 03-16-20	WY-SS-7

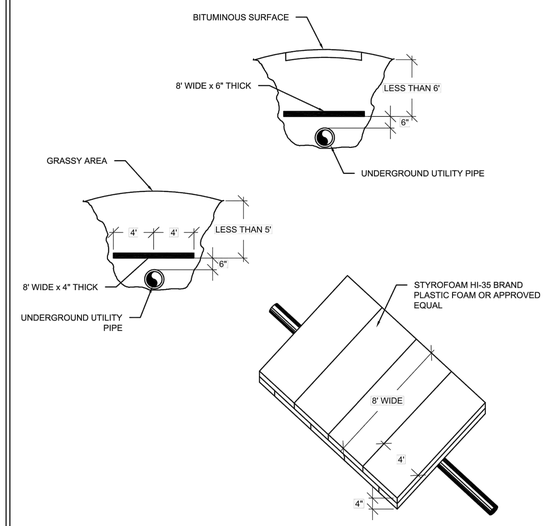

NOTE:
UNDERGROUND UTILITY PIPE CROSSING 8'x8'x4" THICK CENTERED OVER PIPE

Wyoming	INSULATION DETAIL	Special Details Date: 03-01-10 Revised: 03-16-20	WY-W-9

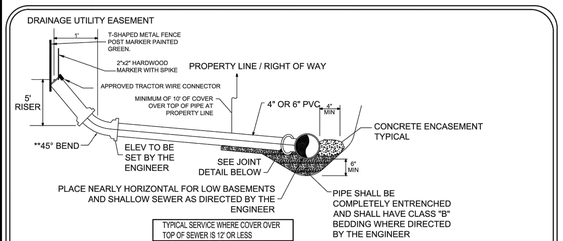

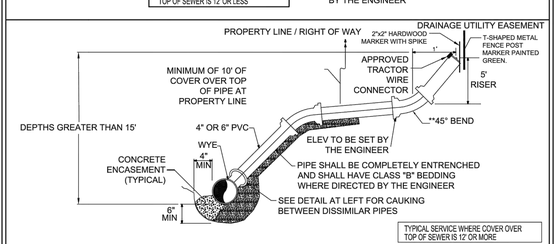

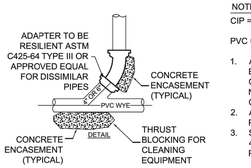

NOTES:
CIP = EXTRA STRENGTH CAST IRON SOIL PIPE.

PVC = POLY-VINYL CHLORIDE SDR 26

1. ALL SERVICE CONNECTIONS INCLUDING NECESSARY BENDS AND SPECIAL FITTINGS SHALL BE PAID FOR AT THE CONTRACT UNIT PRICE BID PER LINEAR FOOT OF 4" OR 6". NO ADDITIONAL COMPENSATION SHALL BE ALLOWED FOR CONCRETE ENCASEMENT OR PIPE BEDDING.
2. ALL SERVICE CONNECTIONS SHALL TERMINATE AT THE PROPERTY LINE OR AS SPECIFIED.
3. SERVICE STRUB SHALL BE PLUGGED AND MARKED WITH A 4"x4" TIMBER PROTUDING 3' OUT OF THE GROUND PAINTED GREEN.

Wyoming	TYPICAL SERVICE CONNECTION FOR SANITARY SEWER	Special Details Date: 03-01-10 Revised: 03-16-20	WY-SS-4

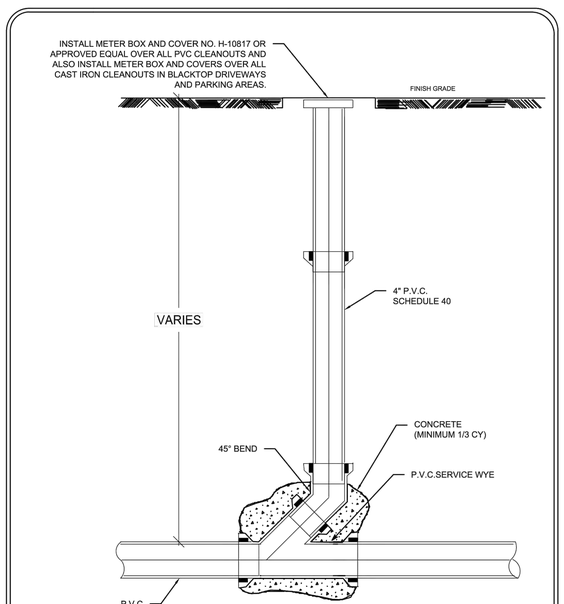

NOTES:
1. PAID AS CLEANOUT (EACH) AND INCLUDES INSTALLATION OF ALL MATERIALS FROM (AND INCLUDING) THE SERVICE WYE UP TO (AND INCLUDING) THE METER BOX AND COVER. ALL NECESSARY ADJUSTMENTS TO ACCOMODATE CONSTRUCTION SHALL BE INCLUDED IN THE CLEANOUT BID ITEM.
2. INSTALL EVERY 75 FEET OR AS DIRECTED BY ENGINEER

Wyoming	SANITARY SEWER SERVICE CLEANOUT	Special Details Date: 03-01-10 Revised: 03-16-20	WY-SS-3

MANHOLES SHALL CONFORM TO THE REQUIREMENTS OF ASTM C-478.

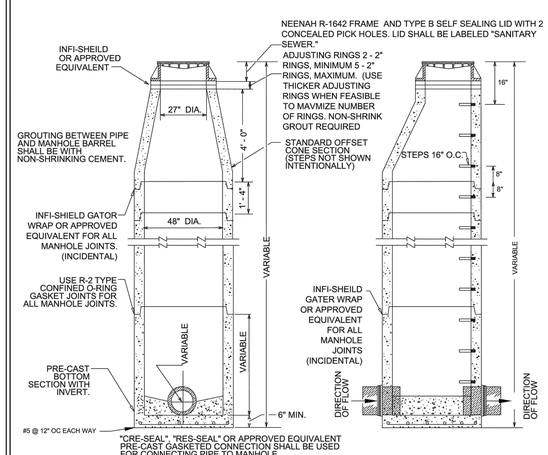

NO SCALE

NOTES:
1. ALL CONNECTIONS TO EXISTING STRUCTURES SHALL BE CORE DRILLED
2. MANHOLE STEPS SHALL BE CAST IN ALUMINUM OR MA INDUSTRY WITH VINYL COATING OR APPROVED EQUIVALENT AND SHALL BE LOCATED ON THE DOWN STREAM SIDE OF MANHOLE
3. STEPS SHALL BE PLACED SO THAT THE OFFSET VERTICAL PORTION OF THE CONE IS FACING DOWN STREAM
4. MANHOLE COVERS SHALL BE CAST WITH THE WORDS "SANITARY SEWER"
5. THE INITIAL & FINAL RAISING OF CASTINGS SHALL BE CONSIDERED INCLUDED IN THE UNIT PRICE BID FOR CASTING THE ASSEMBLY
6. MAXIMUM DEPTH FROM TOP OF CASTING TO FIRST STEP SHALL NOT BE MORE THAN 16"
7. STEPS SHALL ALIGN WITH THE OPENING TO PROVIDE ACCESS TO THE MANHOLES.
8. ALL MANHOLES TO HAVE INFI-SHIELD OR ENGINEER APPROVED EQUIVALENT EXTERNAL MANHOLE CHIMNEY SEAL OR AS APPROVED BY ENGINEER.
9. MARKING POST SHALL BE SUPPLIED AND INSTALLED BY THE CONTRACTOR AT ALL MANHOLES LOCATED OUTSIDE OF THE STREET SECTION.
10. SERVICES SHALL NOT ENTER THE MANHOLES UNLESS APPROVED BY THE CITY ENGINEER.

Wyoming	STANDARD MANHOLE FOR SANITARY SEWER	Special Details Date: 03-01-10 Revised: 03-16-20	WY-SS-1

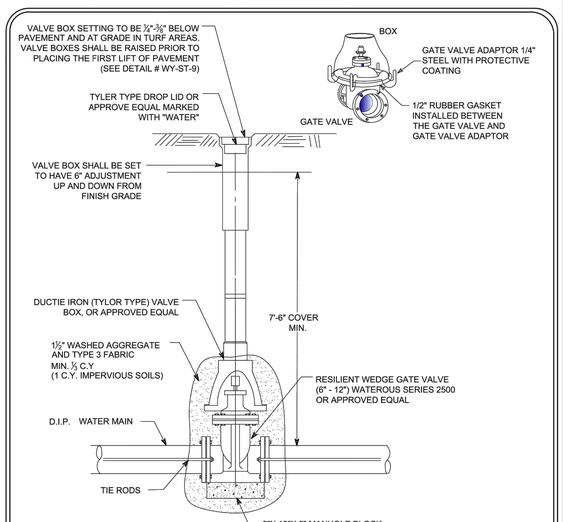

NOTES:
1. GATE VALVES SHOULD BE USED ON 6" THROUGH 12" WATERMAIN.
2. VALVE BOX INSERTS ARE NOT ALLOWED UNLESS APPROVED BY THE ENGINEER.
3. VALVE BOXES SHALL BE INSTALLED PLUMB AND SHALL ALLOW A 4" P.V.C. PIPE TO PASS ENTIRELY OVER THE GATE VALVE NUT AFTER INSTALLATION IS COMPLETE.
4. ALL VALVES SHALL BE TIED WITH 3/4" THREADED TIE RODS TO THE MAIN. MEGA LUGS MAY BE USED IN LIEU OF TIE RODS.
5. THE HEIGHT OF THE CAST IRON OR DUCTILE IRON ADJUSTMENT RING IS DETERMINED BY THE THICKNESS OF THE WEAR COURSE.
6. CAST IRON OR DUCTILE IRON ADJUSTMENT RINGS TO BE INSTALLED AS PER MANUFACTURE'S RECOMENDATION.
7. THE INITIAL & FINAL RAISING OF VALVE BOXES SHALL BE CONSIDERED INCIDENTAL TO THE PROJECT.

Wyoming	VALVE BOX INSTALLATION	Special Details Date: 03-01-10 Revised: 03-16-20	WY-W-3

WIDSETH
ARCHITECTS ▪ ENGINEERS ▪ SCIENTISTS ▪ SURVEYORS

I HEREBY CERTIFY THAT THIS PLAN, SPECIFICATION, OR REPORT WAS PREPARED BY ME OR UNDER MY DIRECT SUPERVISION AND THAT I AM A DULY LICENSED PROFESSIONAL ENGINEER UNDER THE LAWS OF THE STATE OF MINNESOTA.
TIMOTHY M. HOULE
DATE: 05/24/2021 LIC. NO. 25132

REV#	DATE	REVISIONS DESCRIPTION	BY
	11/06/2020	ADDRESS CITY COMMENTS	ADB
	12/08/2021	ADDRESS 100-YR STORM	

DATE: AUGUST 2021
SCALE: AS SHOWN
DRAWN BY: ERC
CHECKED BY: TMH
CSB NUMBER: 2020-10572

DIAMOND RIDGE - EMERALD AVENUE
BRINKMANN CUSTOM HOMES
WYOMING, MN
DETAILS

SHEET NO.
C3.0

J:\Beckmann Custom Homes-44746\2020-10572\CADD\Civil\C-DT-2020-10572.dwg Plotted by:Joshua Rebennack 12/8/2021 2:25:19 PM

© 2021 WIDSETH

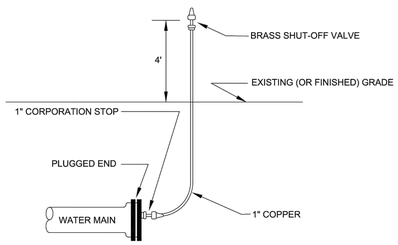

NOTE:
1. RE-USE EX.AIR BLEED LINES AND PLUGS ON PROPOSED STUBS. INSTALLATION TO BE MADE AT NO ADDITIONAL COMPENSATION. FURNISH NEW GASKETS WHERE REQUIRED.
2. NEW LINES WILL BE PAID FOR AT UNIT PRICE BID FOR 1" COPPER AND 1" CORPORATION STOP, AS SPECIFIED. ALL OTHER WORK TO BE INCIDENTAL TO THE PROJECT.
3. TO BE REMOVED AFTER TESTING AND/OR PRIOR TO FREEZE-UP. INSTALL BLOCKING AT PLUGGED END AFTER COPPER REMOVAL.

TEMPORARY AIR BLEED INSTALLATION DETAIL	Special Details	Date: 03-01-10 Revised: 03-16-20	WY-W-6

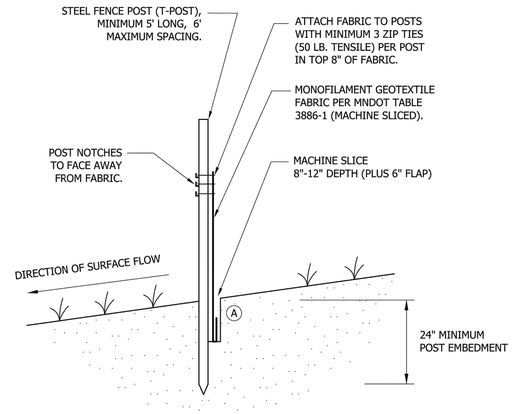

NOTE:
THE MACHINE SLICED METHOD (THIS DETAIL) IS THE STANDARD SILT FENCE INSTALLATION METHOD. HEAVY-DUTY (ERO-1B) OR STANDARD (ERO-1C) SILT FENCE INSTALLATION METHODS SHOULD ONLY BE USED WHEN APPROVED OR DIRECTED BY THE CITY.

(A) COMPACTION:
AFTER "SLICING" IN THE FABRIC AND *BEFORE* INSTALLATION OF STEEL POSTS, DRIVE INSTALLATION EQUIPMENT OVER THE "SLICE" WHILE FABRIC IS LAYING ON THE GROUND. *THEN* INSTALL STEEL POSTS AND PULL UP FABRIC TO ATTACH AT A UNIFORM HEIGHT.

SILT FENCE MACHINE SLICED	Special Details	Date: 03-01-10 Revised: 03-13-20	WY-EC-2

NOTES:
1. ALL NEW AND EXISTING WATER SERVICE LOCATIONS SHALL BE MARKED IN CURB AS SHOWN. STAMPING OF SERVICE LOCATIONS SHALL BE CONSIDERED INCIDENTAL TO THE PRICE OF THE CURB.
2. STAMPS FROM CITY OF WYOMING PUBLIC WORKS TO BE USED FOR A REFUNDABLE SECURITY DEPOSIT OF $500.
3. STAMPS NOT PLACED BY CITY STAMP WILL NOT BE ACCEPTED AND THAT SECTION OF CURB MUST BE REMOVED AND REPLACED AT THE CONTRACTOR'S EXPENSE.

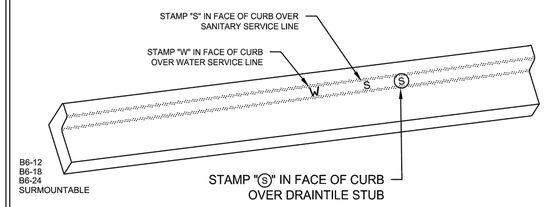

UTILITY SERVICE LOCATION STAMP IN CURB	Special Details	Date: 03-04-15 Revised: 03-16-20	WY-ST-12

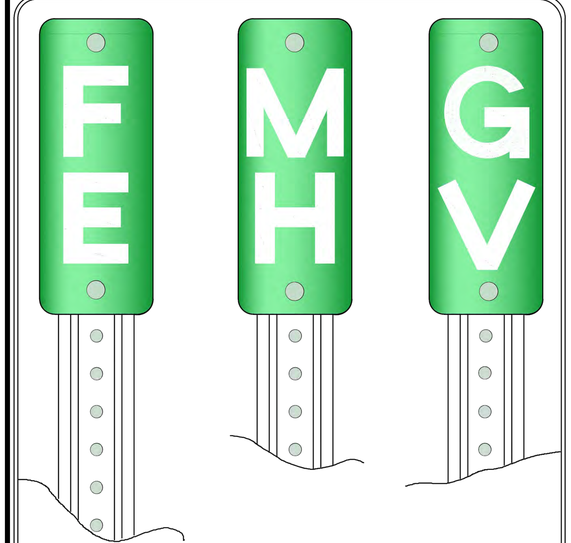

NOTES:
1. STRUCTURE MARKER SIGNS SHALL BE FURNISHED AND INSTALLEDFOR ALL STRUCTURES LOCATED OUTSIDE OF THE STREET RIGHT OF WAY AND SHALL BE CONSIDERED INCIDENTAL.
2. 0.063" THICK ALUMINUM SIGN. WHITE LETTERS ON GREEN HIGH INTENSITY PRISMATIC REFLECTORIZED BACKGROUND.
3. U-CHANNEL POST, MINIMUM 1.2LB./FT. 6'- 6" LONG, PAINTED GREEN.
4. SIGNS TO BE INSTALLED ON RIGHT HAND SIDE OF STRUCTURE (12" FROM STRUCTURE TOWARD ROAD) WHEN FACING STRUCTURE AT ROAD.

STRUCTURE MARKER SIGN	Special Details	Date: 03-01-10 Revised: 03-16-20	WY-SIG-1

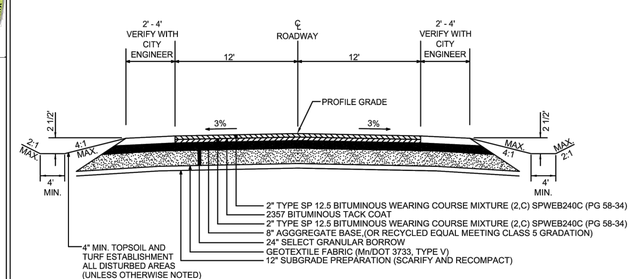

NOTE:
1. TYPICAL SECTION MAY VARY PER PLAN
2. CONSTRUCT FIANL LIFT OF BITUMINOUS ONE FREEZE / THAW CYCLE AFTER COMPLETION OF UTILITY WORK.

TYPICAL RURAL BITUMINOUS PAVEMENT SECTION	Special Details	Date: 02-19-15 Revised: 03-16-20	WY-ST-2

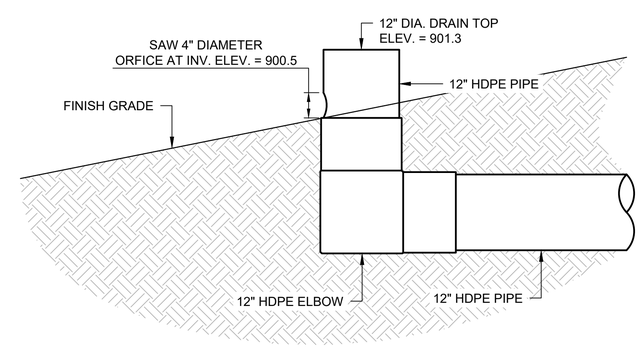

HDPE DRAINAGE INLET DETAIL

SCALE: NONE

J:\Beckmann Custom Homes-44746\2020-10572\CADD\Civil\C-DT-2020-10572.dwg Plotted by:Joshua Rebennack 12/8/2021 2:25:24 PM

© 2021 WIDSETH

WIDSETH
ARCHITECTS ▪ ENGINEERS ▪ SCIENTISTS ▪ SURVEYORS

I HEREBY CERTIFY THAT THIS PLAN, SPECIFICATION, OR REPORT WAS PREPARED BY ME OR UNDER MY DIRECT SUPERVISION AND THAT I AM A DULY LICENSED PROFESSIONAL ENGINEER UNDER THE LAWS OF THE STATE OF MINNESOTA.

TIMOTHY M. HOULE DATE: 09/24/2021 LIC. NO. 25132

DATE	REV#	REVISIONS DESCRIPTION	BY
11/06/2020		ADDRESS CITY COMMENTS	ADB
12/08/2021		ADDRESS 100-YR STORM	

DATE: AUGUST 2021
SCALE: AS SHOWN
DRAWN BY: ERC
CHECKED BY: TMH
JOB NUMBER: 2020-10572

DIAMOND RIDGE - EMERALD AVENUE
BRINKMANN CUSTOM HOMES
WYOMING, MN
DETAILS

SHEET NO.
C3.1

STORM WATER POLLUTION PREVENTION PLAN NARRATIVE:

Project Location:
Diamond Ridge is a proposed development in the City of Wyoming, MN. A site location map has been provided detailing the location of the proposed improvements

Existing Site Description:
The site consists of wooded and grassed area with wetlands on site. The site is accessed by either Emerald Avenue or 261st/ Street.

Proposed Site Description:
The proposed improvements consist of putting a cul-de-sac on 261st Street with three adjacent lots. The development will consist of 3 residential lots that will be connected to City water and sewer. The property is approximately 2.98 acres in size and maintains approximately 0.0 acres of that in impervious surface coverage. Under the proposed conditions, the site will maintain approximately 0.56 acres of impervious surface coverage. The total area of impervious surface will increase but will be less than one acre of new impervious surface coverage. Stormwater treatment is required not required from an NPDES standpoint, however, the City of Wyoming has stormwater regulations that require stormwater treatment for the proposed improvements. A vegetated infiltration swale will be constructed as part of the proposed improvements to reduce the peak runoff rates. The vegetated infiltration swale has been maximized to the extent possible and will treat 2" of runoff from the total site impervious area and provide rate control entering the 200+ acre wetland . A stormwater management plan has been developed and is available upon request and shall be considered part of this SWPPP. The total land disturbance will be approximately 1.5 acres.
The project will be disturbing less than 10 acres; therefore, temporary sediment control basins are not needed.
The proposed site consists of Zimmerman fine sand, Isanti loamy fine sand, Lino loamy fine sand, and Seelyeville muck. The existing and proposed drainage areas will be altered by the proposed development and onsite stormwater vegetated infiltration swale will be utilized to offset the increased impervious surface, based on City stormwater regulations. Only small modifications will be incorporated to the interior drainage area boundaries to maximize the amount of runoff that will be directed to the infiltration basin constructed.

Receiving Waters:
****

Water Body ID	Water Body Name	Type	Special	Impaired Water
N/A	Sunrise River, South Branch	River	Y	Y
N/A	Higgins	Lake	N	N
13005600	Heims	Lake	N	N
N/A	Unnamed	Lake	N	N

****
Dates of Construction:
The project will be started Fall 2021, with construction being completed in Spring 2022.
Contact Information:
Owner:
Beckmann Custom Homes
Contact: Chuck Beckmann
Address: PO BOX 126
Andover, MN 55304
Email: clbeckmann@gmail.com
Phone: (612) 599-6141
Contractor:
[Company] TBD
[Contact]
[Address]
[City, State Zip]
[Email]
[Phone]
Estimated Erosion Prevention and Sediment Control Quantities
****

Item	Estimated Quantity
Seeding	0.41 AC
Category 3 Erosion Control Blanket	661 SQ.YD.
Silt Fence	1175 LF

****
Dewatering:
It is anticipated that dewatering will be required during portions of the utility installation. The discharge for dewatering can be directed to the city storm sewer system, but measures shall be taken so that erosion does not occur at the discharge of the dewater pipe.
Total disturbed area within project areas are as follows:
****

Project Disturbed Area =	1.5 AC
Existing Impervious =	0.0 AC
Proposed Impervious Area =	0.56 AC
Temporary Seeding =	0.41 AC

****
Unique Storm Water Management Features
The Sunrise River is within one mile of the project site and will receive stormwater runoff from the site. The Sunrise River has been identified as a special water and has an impairment in this section. Sections 23.98, 23.10 and 23.11 apply to this permit and have been incorporated herein.
TMDL Implementation Plans Containing Storm Water Requirements
No TMDL Implementation Plans currently exist for the receiving waters on this project.
Long Term Maintenance
City of Wyoming will be responsible for the long-term maintenance of the sedimentation basin practices. The sedimentation basin shall be inspected annually. The sedimentation basin shall be cleaned and restored to design grade after one half of the storage volume has been filled with sediment. The outlet shall be monitored and repaired for any erosion or defects that may develop.

Erosion Control Supervisor Requirements
The Contractor must identify an Erosion Control Supervisor (ECS) who is knowledgeable and experienced in the application of erosion and sediment control Best Management Practices (BMP's). The ECS must work with the Contractor to oversee and implement the SWPPP, and the installation, inspection, and maintenance of erosion and sediment control BMP's before, during and after construction. The Contractor/ECS is required to comply with the training requirements in Part III.A of the NPDES Permit. The permittee(s) shall ensure that employees are properly trained in the following areas with certification proof provided at the pre-construction conference.
SWPPP Preparation:
Name: Emma R. Clarke
Information on file at Widseth and is available upon request.
Site Manager:
Name: _____
Dates of Training: _____
Instructors Name providing Training: _____
Content of Training (incl. hours): _____
BMP Installer:
Name: _____
Dates of Training: _____
Instructors Name providing Training: _____
Content of Training (incl. hours): _____

The Contractor/ECS shall develop a chain of responsibility with all operators on the site to ensure that the SWPPP will be implemented and stay in effect until the project site has undergone Final Stabilization in accordance with Part IV.G of the NPDES Permit and a Notice of Termination (NOT) has been submitted to the MPCA in accordance with Part II.C of the NPDES Permit.
The Contractor/ECS must routinely inspect the entire construction site at least once every seven days during active construction and within 24 hours after a rainfall event greater than 0.5 inch in 24 hours. The Contractor shall take action to eliminate any deficiencies found during these inspections and contact the MPCA if contaminated stormwater has reached any surface water.
The Contractor must provide 2 rain gauges to be installed on the construction site. Inspections, maintenance and documentation must be in accordance with the NPDES Permit Part IV.E. See Part III.D of the NPDES Permit for record retention requirements. Copies of the inspection records are to be submitted to the Engineer.
The Contractor/ECS must amend the SWPPP as necessary to include additional requirements, such as additional or modified BMP's, designed to correct problems or address situations in accordance with Part III.A.5 of the NPDES Permit.
Individual Site Plans will be required by the E.C. Supervisor as deemed necessary. Refer to MnDot 1717.
A daily inspection log will be required by the E.C. Supervisor of all sediment, erosion and materials on site (ie: chemicals, etc.). This log shall be presented daily to the observer on site and kept current.
The E.C. Supervisor shall provide an inlet staging schedule and protection plan for the entire project. This plan and schedule shall be presented to the engineer at the pre-construction conference. Minimum requirements of the plan and schedule shall include:
- date of proposed inlet protection device installation
- protection device utilized
- estimated duration of device in operation
- schedule of subsequent devices that will be utilized for inlet protection

The contractor shall have a petroleum release plan and shall have all necessary materials on hand to implement the plan. All employees shall be trained in implementation of the plan. The MPCA shall be informed of any petroleum spills.
STORM WATER POLLUTION PREVENTION PLAN NOTES:
Construction Practices to Minimize Storm Water Contamination
- Stockpiles should be constructed away from slopes and natural drainage ways.
- Collected solid waste, sediment, asphalt and concrete millings, floating debris, paper, plastic, fabric, construction and demolition debris and other wastes must be disposed of properly and must comply with MPCA disposal requirements.
- No construction materials can be buried on site.
- Licensed sanitary waste management handler must dispose of sanitary waste.
- Fertilizers must be stored in covered locations.
- Restricted access to chemical storage areas must be provided to prevent vandalism.
- All chemicals must be stored in locked containers when not in use.
- Oil, gasoline, paint and any hazardous substances must be properly stored, including secondary containment, to prevent spills, leaks or other discharge.
- Storage and disposal of hazardous waste must be in compliance with MPCA regulations.
- Vehicles must be monitored for leaks and preventative maintenance scheduled.
- Spill kits must be available during equipment fueling and maintenance operations.
- External washing of trucks and other construction vehicles must be limited to a defined area of the site. Runoff must be contained and waste properly disposed of. No engine degreasing is allowed on site.
- Asphalt substances must be applied according to manufactures recommendations.
- Spray guns must be cleaned on removable surfaces such as tarpaulins.
- Contractor/Erosion Control Supervisor must make a spill response plan before the application of any chemical that may be harmful to the environment.
- All spills must be reported immediately. Spill cleanup materials must be available on site. Material shall include but not limited to brooms, mops, rags, gloves, absorbent material, sand plastic and metal containers. Spills that reach storm water conveyance systems connected to a Water of the State must be immediately reported to the MPCA State Duty Officer.
- Contractor must control weeds on the entire project site.
- Form release oil must be applied over a pallet covered with absorbent material to collect excess fluid. The absorbent material shall be replaced when saturated.
- Dust control must be provided as conditions warrant.
- If this project is not stabilized before winter conditions stop construction activities, it shall be the contractor's responsibility to ensure sediment does not reach a water of the state. A written plan of this activity shall be presented to the engineer 1 month before expected project shut down for the season occurs. This plan shall include but not be limited to:
  - o date of proposed bmp employment
  - o duration of bmp's employed
  - o schedule of subsequent bmp's employed

Temporary and Permanent Erosion Control Practices
BMP's proposed for temporary and permanent erosion control are shown on the erosion control plan sheets and are further identified as follows:
Temporary Erosion Control Methods
All disturbed soil areas shall be temporarily mulched with Type 1 mulch within 7 days if the area is not being actively worked.
Temporary seed mix 22-111 at a rate of 31 lbs/ac of Pure Live Seed will be used only in cases where disturbed soil areas are anticipated to remain unworked in excess of 7 days prior to placement of Type 1 mulch at 2 tons per acre.
Permanent Erosion Control Methods
Permanent erosion control will be achieved by using Seed Mixture 25-151 at a rate of 200 lbs/ac of Pure Live Seed, Type 1Commerical Grade Fertilizer with a composition of 10-10-10 at a rate of 300 lbs/ac, and Hydraulic Soil Stabilizer, Type 5 at a rate of 2100 lbs/ac on all disturbed construction areas.

Temporary Sediment Control Methods
Silt fence or windrowed topsoil will be used as the primary control. Biorolls will be used as secondary control along each side of roadway at all low points and areas of high velocity drainage to prevent sediment from draining off roadway.
Rock construction entrances shall be placed at all locations construction vehicles will be exiting the project area.
Unique Environmental Concerns
There are wetlands that are adjacent to the project. Special care shall be taken to minimize impacts to the surrounding wetlands.
Timing of BMP Installation
Erosion and sediment control BMP's must be installed as necessary to minimize erosion from disturbed surfaces and capture sediment onsite. All BMP's must conform to 2018 Permit Reference 8 and 9 of the NPDES Permit.

Erosion Prevention Practices
The Contractor/ECS is responsible for the Erosion Prevention Practices contained in Part IV.B of the NPDES Permit. The Contractor/ECS must plan for and implement appropriate construction phasing, vegetative buffer strips, horizontal slope grading and other construction practices that minimize erosion. The location of areas not to be disturbed must be delineated (marked) on the development site before work begins.
All exposed soil areas must be stabilized as soon as possible to limit soil erosion but in no case later than 7 days after the construction activity in that portion of the site has temporarily or permanently ceased.
The normal wetted perimeter of any temporary or permanent drainage ditch or swale that drains water from any portion of the construction site, or diverts water around the construction site, must be stabilized within 200 lineal feet from the property edge, or from the discharge into any surface water. Stabilization must be complete within 24 hours after connecting to surface water.
Pipe outlets must be provided with temporary or permanent energy dissipation within 24 hours after connection to a surface water.
Sediment Control Practices
The Contractor/ECS is responsible for the Sediment Control Practices contained in Part IV.C of the NPDES Permit. Sediment Control Practices must be installed on all down gradient perimeters before any upgradient land disturbing activities begin. There shall be no unbroken slope length greater than 75 feet for slopes with a grade of 3:1 or steeper. These practices must remain in place until Final Stabilization has been established in accordance with Part IV.G of the NPDES Permit.
The timing of installation of Sediment Control Practices may be adjusted to accommodate short-term activities such as clearing or grubbing, or passage of vehicles. Short-term activities must be completed as quickly as possible and the practices must be installed immediately after the activity is completed. However, the Sediment Control Practices must be installed before the next precipitation event even if the activity is not complete.

All storm drain inlets must be protected by appropriate BMP's during construction until all sources with potential for discharging to the inlet have been stabilized. Inlet protection may be removed if a specific safety concern has been identified and the procedure in Part IV.C.4 of the NPDES Permit is followed.
Temporary soil stockpiles must have super duty silt fence or other effective sediment controls, and cannot be placed in surface waters, including stormwater conveyances such as curb and gutter systems, or conduit and ditches unless there is a bypass for stormwater.
Vehicle tracking of sediment from the construction site must be minimized by BMP's such as stone or wood chip pads, concrete or steel wash racks, or equivalent systems. Street sweeping with collection must be used if such BMP's are not adequate to prevent sediment from being tracked onto the street (see Part IV.E.4.d of the NPDES Permit).
Dewatering related to the construction activity must comply with Part IV.D of the NPDES Permit. Dewatering discharge that may have turbid or sediment laden discharge must be discharged to a temporary or permanent sedimentation basin on the project site whenever possible and BMP's must be implemented to prevent water containing sediment or other pollutants from being discharged to a Water of the State.
Contractor may construct temporary sedimentation basins in accordance with Part III.B of the NPDES Permit.
Pollution Prevention:
Each contractor on site is individually responsible for maintaining a clean and safe work site. The person responsible shall dispose of all solid waste properly and in compliance with the MPCA disposal requirements. Solid waste includes but is not limited to: collected sediment, asphalt and concrete millings, floating debris, paper, plastic, fabric, construction and demolition debris.
The person responsible shall be responsible for all hazardous materials during construction. Oil, gasoline, grease, paint and other hazardous substances must be properly stored, including secondary containment, to prevent spills, leaks and unwanted discharges. Restricted access to storage areas must be provided to prevent vandalism. Storage and disposal of hazardous waste must be in accordance with the MPCA regulations. External washing of trucks and other construction equipment is prohibited on this project site.
Concrete washout site: all liquid and solid wastes generated by concrete washout operations must be contained in a leak proof containment facility or impermeable liner. A compacted clay liner that does not allow washout liquids to enter the ground water is considered an impermeable liner. Another option to provide an impermeable basin in sandy soils is to construct a basin 18 inches deep with a minimum size of 12 feet by 14 feet. The basin should then be lined with a 10-mil poly liner that is secured on the perimeter. The liquid and solid wastes must not contact the ground, and there must not be runoff from the concrete washout operations or areas. Liquid and solid wastes must be disposed of properly and in compliance with the MPCA regulations. A sign must be installed adjacent to each washout facility to inform concrete equipment operators to utilize the proper facilities.
The following telephone numbers are provided for assistance to the contractors and are not necessarily comprehensive; it is the responsibility of the individual contractor to make sure of proper notification.
Poison Control (800) 222-1222
24 Hour Spill Emergency (800) 422-0798

Payment
Cost for permanent and temporary erosion and sediment control measures shown on the plans will be included in lump sum bid prices. The costs to maintain and remove these devices shall be incidental to the bid. The cost for temporary seeding, soil stabilization, or any additional temporary erosion and sediment control devices shall be paid according to MN/DOT Spec. 2573.4 or 2575.5 as applicable. All costs for documentation required by the Permit shall be incidental to other items unless a specific bid item is established.

Contacts
****

Agency	PermitName		Phone Number
MPCA	NPDES	Jim Dexter	(218) 302-6632
Wyoming	City	Charles Almhjeld	(615) 462-0580
SWPPP Design	WSN	Emma Clarke	(218) 316-3661
EC Supervisor	TBD		

****
Amendments to the SWPPP:
Date:
1.
2.
3.
4.
5.

© 2021 WIDSETH

WIDSETH
ARCHITECTS • ENGINEERS • SCIENTISTS • SURVEYORS

I HEREBY CERTIFY THAT THIS PLAN, SPECIFICATION, OR REPORT WAS PREPARED BY ME OR UNDER MY DIRECT SUPERVISION AND THAT I AM A DULY LICENSED PROFESSIONAL ENGINEER UNDER THE LAWS OF THE STATE OF MINNESOTA.
TIMOTHY M. NOULE
DATE: 09/24/2021 LIC. NO. 25132

DATE	REV#	REVISIONS DESCRIPTION	BY
11/05/2020		ADDRESS CITY COMMENTS	ADB
12/08/2021		ADDRESS 100-YR STORM	

DATE: AUGUST 2021
SCALE: AS SHOWN
DRAWN BY: ERC
CHECKED BY: TMN
JOB NUMBER: 2020-10572

DIAMOND RIDGE - EMERALD AVENUE
BRINKMANN CUSTOM HOMES
WYOMING, MN

SWPPP NARRATIVE

SHEET NO.
C4.0

IMPAIRED WATERS DATA

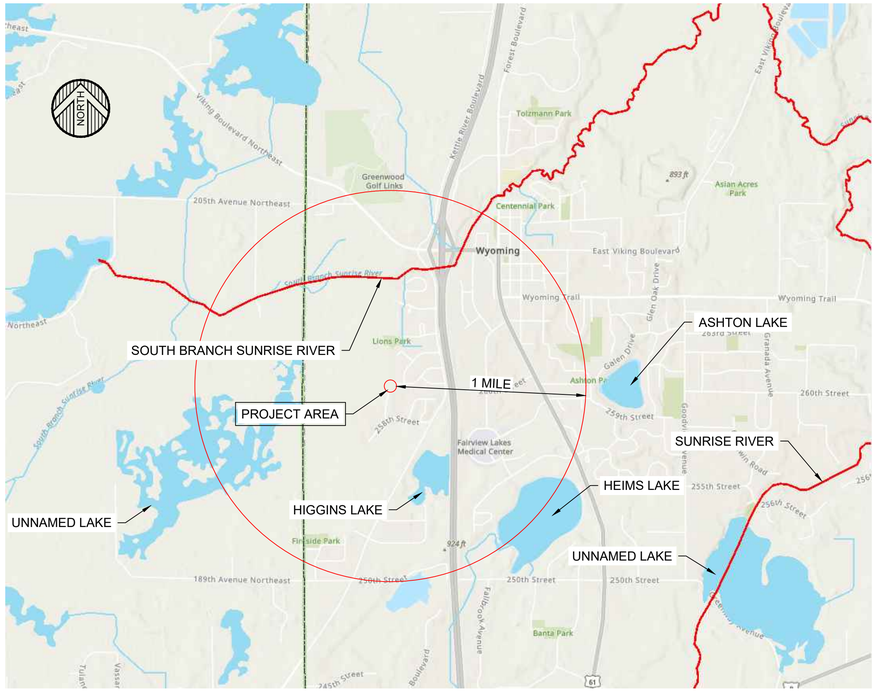

Impaired Waters Legend

Delisted waters	
Delisted lakes	
Delisted streams	
Impaired waters	
Impaired lakes	
Impaired lakes partially within reservations	
Impaired lakes wholly within reservations	
Impaired streams	
Impaired streams partially within reservations	
Impaired streams wholly within reservations	
Impaired wetlands	
Impaired beaches	
List corrections	
Lake corrections	
Stream corrections	
Surface waters	
All lakes	
All streams	
Counties	
Watershed boundary	

SOIL DATA

Map Unit Legend

Map Unit Symbol	Map Unit Name	Acres in AOI	Percent of AOI
158B	Zimmerman fine sand, 1 to 6 percent slopes	2.4	38.1%
161	Isanti loamy fine sand	2.3	36.8%
162	Lino loamy fine sand	1.6	25.1%
Totals for Area of Interest		**6.2**	**100.0%**

Soil Map—Chisago County, Minnesota

MAP LEGEND

Area of Interest (AOI)
- Area of Interest (AOI)

Soils
- Soil Map Unit Polygons
- Soil Map Unit Lines
- Soil Map Unit Points

Special Point Features
- Blowout
- Borrow Pit
- Clay Spot
- Closed Depression
- Gravel Pit
- Gravelly Spot
- Landfill
- Lava Flow
- Marsh or swamp
- Mine or Quarry
- Miscellaneous Water
- Perennial Water
- Rock Outcrop
- Saline Spot
- Sandy Spot
- Severely Eroded Spot
- Sinkhole
- Slide or Slip
- Sodic Spot
- Spoil Area
- Stony Spot
- Very Stony Spot
- Wet Spot
- Other
- Special Line Features

Water Features
- Streams and Canals

Transportation
- Rails
- Interstate Highways
- US Routes
- Major Roads
- Local Roads

Background
- Aerial Photography

MAP INFORMATION

The soil surveys that comprise your AOI were mapped at 1:15,800.

Warning: Soil Map may not be valid at this scale.

Enlargement of maps beyond the scale of mapping can cause misunderstanding of the detail of mapping and accuracy of soil line placement. The maps do not show the small areas of contrasting soils that could have been shown at a more detailed scale.

Please rely on the bar scale on each map sheet for map measurements.

Source of Map: Natural Resources Conservation Service
Web Soil Survey URL:
Coordinate System: Web Mercator (EPSG:3857)

Maps from the Web Soil Survey are based on the Web Mercator projection, which preserves direction and shape but distorts distance and area. A projection that preserves area, such as the Albers equal-area conic projection, should be used if more accurate calculations of distance or area are required.

This product is generated from the USDA-NRCS certified data as of the version date(s) listed below.

Soil Survey Area: Chisago County, Minnesota
Survey Area Data: Version 17, Jun 4, 2020

Soil map units are labeled (as space allows) for map scales 1:50,000 or larger.

Date(s) aerial images were photographed: Apr 3, 2015—Sep 13, 2016

The orthophoto or other base map on which the soil lines were compiled and digitized probably differs from the background imagery displayed on these maps. As a result, some minor shifting of map unit boundaries may be evident.

J:\Beckmann Custom Homes-44746\2020-10572\CADD\Civil\C-SW-2020-10572.dwg Plotted by:Joshua Rebennack 12/8/2021 2:25:41 PM

© 2021 WIDSETH

WIDSETH
ARCHITECTS • ENGINEERS • SCIENTISTS • SURVEYORS

I HEREBY CERTIFY THAT THIS PLAN, SPECIFICATION, OR REPORT WAS PREPARED BY ME OR UNDER MY DIRECT SUPERVISION AND THAT I AM A DULY LICENSED PROFESSIONAL ENGINEER UNDER THE LAWS OF THE STATE OF MINNESOTA.

TIMOTHY M. KOALE DATE: 09/24/2021 LIC. NO. 25132

REV#	DATE	REVISIONS DESCRIPTION	BY
	11/05/2020	ADDRESS CITY COMMENTS	ADB
	12/08/2021	ADDRESS 100-YR STORM	

DATE: AUGUST 2021
SCALE: AS SHOWN
DRAWN BY: ERC
CHECKED BY: TMH
JOB NUMBER: 2020-10572

DIAMOND RIDGE - EMERALD AVENUE
BRINKMANN CUSTOM HOMES
WYOMING, MN

SWPPP MAPS

SHEET NO.
C4.1

GENERAL SITE PLAN NOTES:

- THE SUBSURFACE UTILITY INFORMATION IN THIS PLAN IS UTILITY QUALITY LEVEL D. THIS QUALITY LEVEL WAS DETERMINED ACCORDING TO THE GUIDELINES OF CI/ASCE 38-.2, ENTITLED "STANDARD GUIDELINES FOR THE COLLECTION AND DEPICTION FO EXISTING SUBSURFACE UTILITY DATA".
- CONTRACTOR SHALL CALL GOPHER STATE ONE CALL PRIOR TO BEGINNING REMOVALS.
- THE CONTRACTOR SHALL VERIFY ALL EXISTING CONDITIONS PRIOR TO CONSTRUCTION AND NOTIFY OWNER AND ENGINEER OF ANY DIFFERENCES BETWEEN THE FIELD AND PLAN.
- CONTRACTOR SHALL BE RESPONSIBLE FOR PROVIDING AND MAINTAINING TRAFFIC CONTROL AND SHALL BE IN COMPLIANCE WITH THE MINNESOTA UNIFORM TRAFFIC CONTROL DEVICES MANUAL AND TEMPORARY TRAFFIC CONTROL ZONE LAYOUTS FIELD MANUAL. THE TRAFFIC CONTROL SHALL BE APPROVED BY THE CITY PRIOR TO INSTALLATION.
- THE CONTRACTOR SHALL RECEIVE THE NECESSARY PERMISSION/PERMITS FOR ALL WORK LOCATED OUTSIDE OF THE MUNICIPAL RIGHT-OF-WAY AND PROPERTY LIMITS.
- ALL CURB TO MEET MINNESOTA DEPARTMENT OF TRANSPORTATION SPECIFICATIONS FOR A TYPE "B618 CURB & GUTTER", UNLESS PLANS ARE MARKED OTHERWISE.
- ALL DIMENSIONS ARE TO BACK OF CURB UNLESS OTHERWISE NOTED.
- ALL CURB RADII ARE 5.0 FEET TO FACE OF CURB UNLESS OTHERWISE NOTED

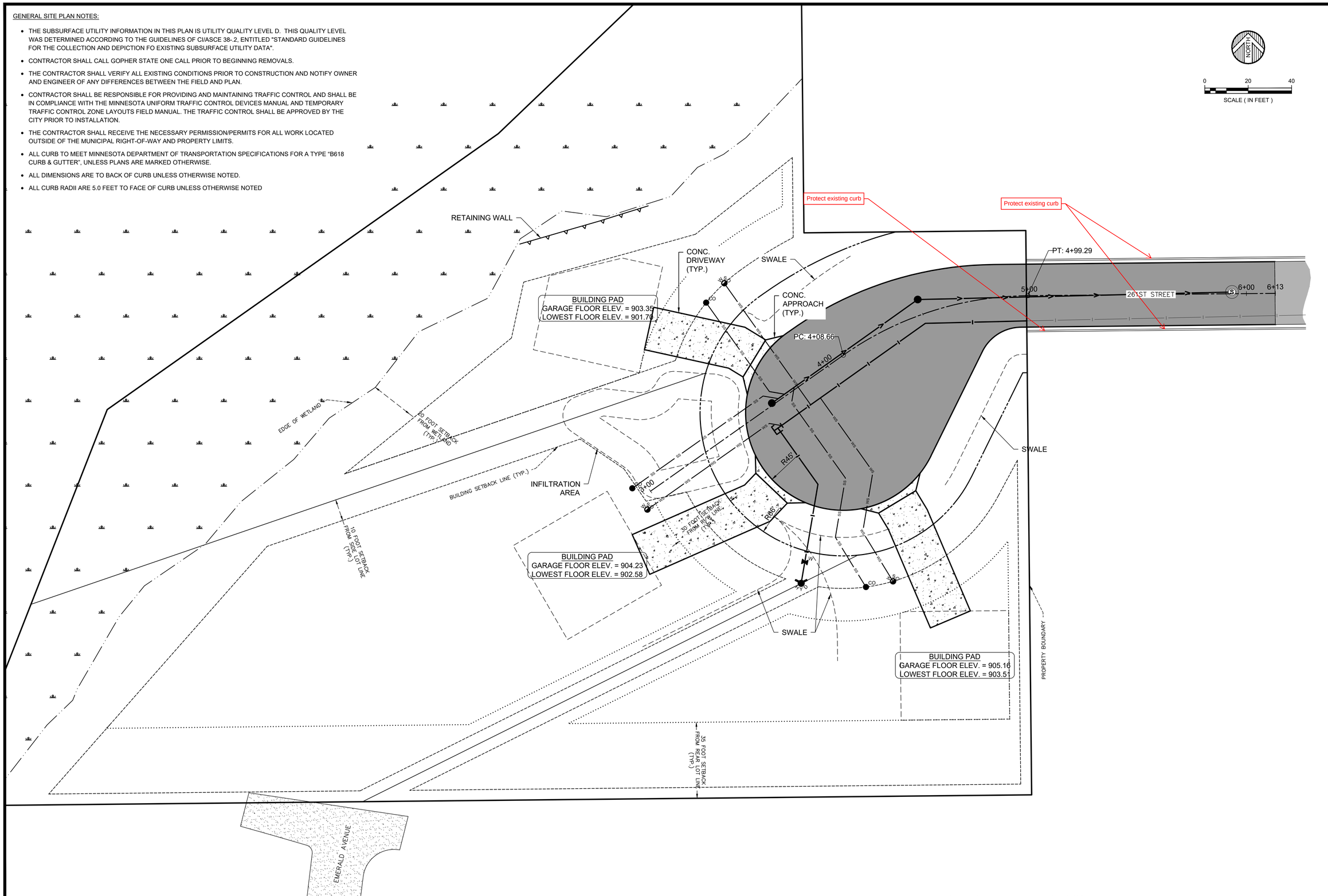

WIDSETH
ARCHITECTS ▪ ENGINEERS ▪ SCIENTISTS ▪ SURVEYORS

I HEREBY CERTIFY THAT THIS PLAN, SPECIFICATION, OR REPORT WAS PREPARED BY ME OR UNDER MY DIRECT SUPERVISION AND THAT I AM A DULY LICENSED PROFESSIONAL ENGINEER UNDER THE LAWS OF THE STATE OF MINNESOTA.

TIMOTHY M. KOALE DATE: 09/24/2021 LIC. NO. 25132

DATE	REV#	REVISIONS DESCRIPTION	BY
12/08/2021		ADDRESS 100-YR STORM	

DATE: AUGUST 2021
SCALE: AS SHOWN
DRAWN BY: ERC
CHECKED BY: TMH
JOB NUMBER: 2020-10572

DIAMOND RIDGE - EMERALD AVENUE
BRINKMANN CUSTOM HOMES
WYOMING, MN

SITE PLAN

SHEET NO.
C6.0

J:\Beckmann Custom Homes-44746\2020-10572\CADD\Civil\C-SP-2020-10572.dwg Plotted by:Joshua Rebennack 12/8/2021 2:26:24 PM

© 2021 WIDSETH

GRADING PLAN NOTES

- THE SUBSURFACE UTILITY INFORMATION IN THIS PLAN IS UTILITY QUALITY LEVEL D. THIS QUALITY LEVEL WAS DETERMINED ACCORDING TO THE GUIDELINES OF CI/ASCE 38-.2, ENTITLED "STANDARD GUIDELINES FOR THE COLLECTION AND DEPICTION OF EXISTING SUBSURFACE UTILITY DATA".
- ALL CONSTRUCTION SHALL CONFORM TO LOCAL, STATE, AND FEDERAL REGULATIONS INCLUDING THE NATIONAL POLLUTANT DISCHARGE ELIMINATION SYSTEM (NPPDES) PERMIT REQUIREMENTS.
- HAULING HOURS MUST BE CONFIRMED WITH THE CITY PRIOR TO BEGINNING WORK.
- SPOT ELEVATIONS SHOWN INDICATE FINISHED PAVEMENT ELEVATIONS, GUTTER FLOW LINE OF CURB GUTTER (FL), BACK OF CURB ELEVATIONS (TC), TOP OF SIDEWALK (TW), AND FINISHED SURFACE GRADE, UNLESS OTHERWISE NOTED.
- ALL SLOPES SHALL BE GRADED TO 3:1 OR FLATTER, UNLESS OTHERWISE NOTED ON THE PLANS.
- INFILTRATION AREA SHALL BE PROTECTED FROM CONSTRUCTION ACTIVITIES TO AVOID COMPACTION OF THE SOILS. IT IS RECOMMENDED THIS AREA BE FENCED OFF AND NOT UTILIZED FOR CONSTRUCTION STAGING, STOCKPILING MATERIALS, OR ANY OTHER CONSTRUCTION RELATED ACTIVITY. THE INFILTRATION AREA SHALL BE SHAPED TO FINAL GRADE AND ALL HEAVY CONSTRUCTION EQUIPMENT SHALL NOT BE ALLOWED IN THE BASIN AFTER FINAL GRADE HAS BEEN ESTABLISHED.

CUT/FILL VOLUME TABLE

ITEM	VALUE
CUT VOLUME(UNADJUSTED)	1,120 CU.YD
FILL VOLUME(UNADJUSTED)	1,297 CU.YD
CUT FACTOR	1.00
FILL FACTOR	1.40
ADJUSTED CUT VOLUME[1]	1,120 CU.YD
ADJUSTED FILL VOLUME[2]	1,816 CU.YD
TOTAL CUT/FILL VOLUME[3]	696 CU.YD

[1] ADJUSTED FILL VOLUME = (CUT VOLUME x CUT FACTOR)
[2] ADJUSTED CUT VOLUME = (FILL VOLUME x FILL FACTOR)
[3] NEGATIVE NUMBER (-123, ETC.) DENOTES VOLUME OF MATERIAL TO BE REMOVED FROM THE SITE; POSITIVE NUMBER (123, ETC.) DENOTES VOLUME OF MATERIAL TO BE DELIVERED TO THE SITE

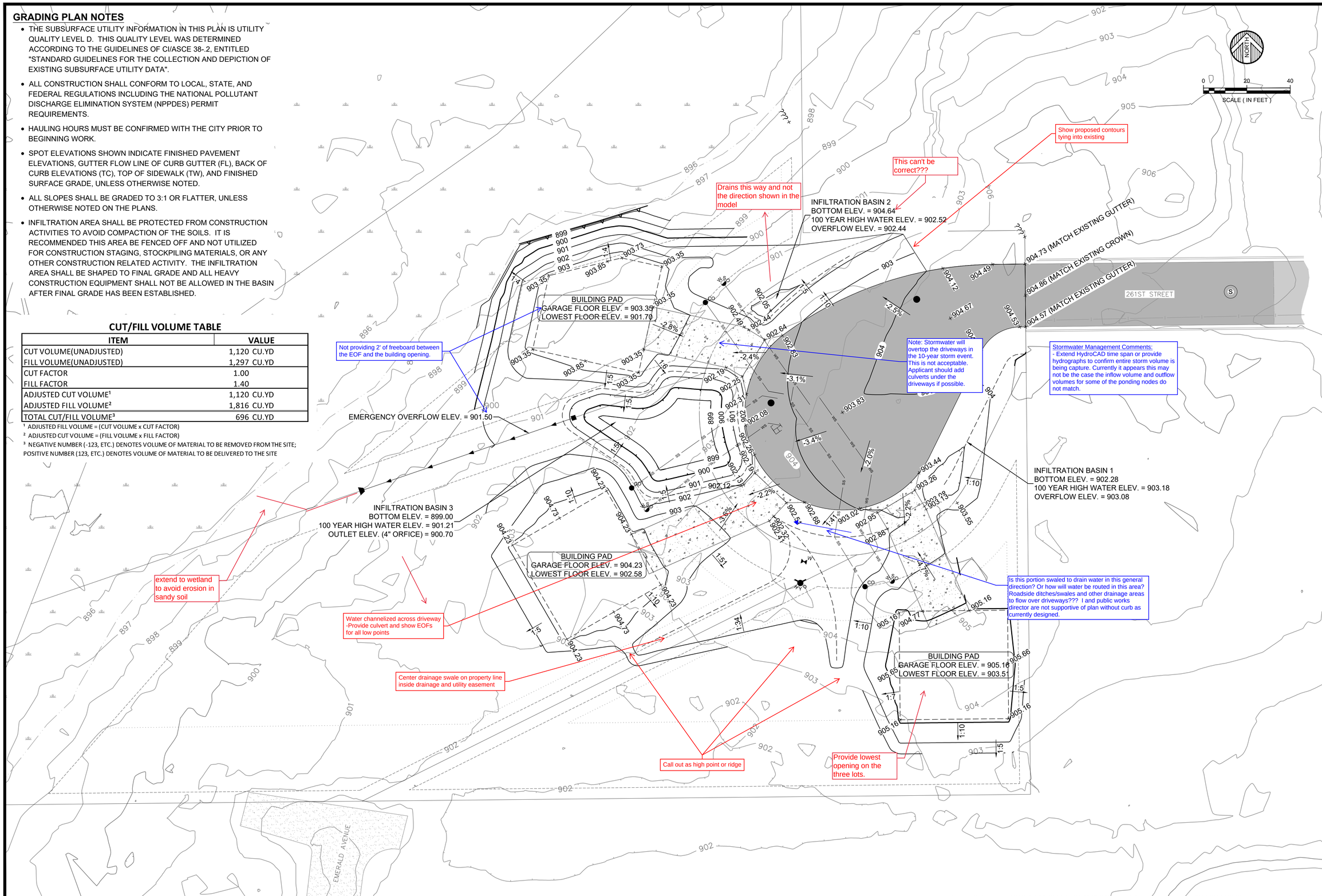

WIDSETH
ARCHITECTS ▪ ENGINEERS ▪ SCIENTISTS ▪ SURVEYORS

I HEREBY CERTIFY THAT THIS PLAN, SPECIFICATION, OR REPORT WAS PREPARED BY ME OR UNDER MY DIRECT SUPERVISION AND THAT I AM A DULY LICENSED PROFESSIONAL ENGINEER UNDER THE LAWS OF THE STATE OF MINNESOTA.
TIMOTHY M. KOLLE
DATE: 09/24/2021 LIC. NO. 25132

REV#	DATE	REVISIONS DESCRIPTION	BY
	12/08/2021	ADDRESS 100-YR STORM	

DATE: AUGUST 2021
SCALE: AS SHOWN
DRAWN BY: ERC
CHECKED BY: TMM
JOB NUMBER: 2020-10572

DIAMOND RIDGE - EMERALD AVENUE
BRINKMANN CUSTOM HOMES
WYOMING, MN

GRADING PLAN

SHEET NO.
C7.0

J:\Beckmann Custom Homes-44746\2020-10572\CADD\Civil\C-GR-2020-10572.dwg Plotted by:Joshua Rebennack 12/8/2021 2:27:33 PM

© 2021 WIDSETH

EROSION CONTROL PLAN NOTES

- THE SUBSURFACE UTILITY INFORMATION IN THIS PLAN IS UTILITY QUALITY LEVEL D. THIS QUALITY LEVEL WAS DETERMINED ACCORDING TO THE GUIDELINES OF CI/ASCE 38-.2, ENTITLED "STANDARD GUIDELINES FOR THE COLLECTION AND DEPICTION OF EXISTING SUBSURFACE UTILITY DATA".
- ALL CONSTRUCTION SHALL CONFORM TO LOCAL, STATE, AND FEDERAL REGULATIONS INCLUDING THE NATIONAL POLLUTANT DISCHARGE ELIMINATION SYSTEM (NPPDES) PERMIT REQUIREMENTS.
- ALL SILT FENCE AND SEDIMENT CONTROL MEASURES SHALL BE IN PLACE PRIOR TO ANY EXCAVATION/CONSTRUCTION AND SHALL BE MAINTAINED UNTIL VIABLE TURF OR GROUND COVER HAS BEEN ESTABLISHED. MAINTENANCE AND REMOVAL OF SEDIMENT CONTROL DEVICES SHALL BE INCIDENTAL TO THE GRADING CONTRACT.
- ALL STREETS UTILIZED FOR PROJECT CONSTRUCTION MUST BE CLEANED AT THE END OF EACH DAY. A ROCK ENTRANCE TO THE SITE MUST BE PROVIDED ACCORDING TO THE DETAILS TO REDUCE TRACKING OF SEDIMENT ONTO PUBLIC STREETS. STREET SWEEPING MAY BE NECESSARY AND WILL BE CONSIDERED INCIDENTAL.
- ALL EXPOSED SOILS MUST BE STABILIZED WITHIN 14 CALENDAR DAYS OF ROUGH GRADE COMPLETION OF AFTER CONSTRUCTION TERMINATES. ALL STOCKPILES SHALL HAVE ADEQUATE SEDIMENT TRAPPING SYSTEMS INSTALLED AROUND THEM.
- ALL AREAS TO BE ESTABLISHED TO GRASS COVER SHALL RECEIVE 4" OF TOPSOIL AND SOD OR SEED. THESE AREAS SHALL BE WATERED UNTIL A HEALTHY STAND OF GRASS IS OBTAINED.
- INLET PROTECTION SHALL BE INSTALLED AT ALL STORM SEWER INLETS WHICH HAVE A POTENTIAL TO RECEIVE RUNOFF FROM THE CONSTRUCTION SITE.
- INFILTRATION AREA SHALL BE PROTECTED FROM CONSTRUCTION ACTIVITIES TO AVOID COMPACTION OF THE SOILS. IT IS RECOMMENDED THIS AREA BE FENCED OFF AND NOT UTILIZED FOR CONSTRUCTION STAGING, STOCKPILING MATERIALS, OR ANY OTHER CONSTRUCTION RELATED ACTIVITY. THE INFILTRATION AREA SHALL BE SHAPED TO FINAL GRADE AND ALL HEAVY CONSTRUCTION EQUIPMENT SHALL NOT BE ALLOWED IN THE BASIN.
- SEE PLAN LEGEND FOR A COMPLETE LEGEND OF HATCHES AND SYMBOLS USED FOR EROSION CONTROL.

LEGEND

- DENOTES SEED MIX 21-111 (TEMPORARY) & MIX 25-131 (COMMERCIAL TURF)
- DENOTES EROSION CONTROL BLANKET (MNDOT SPEC. 2575.504/00073)
- DENOTES SILT FENCE (MNDOT SPEC. 2573.503/00024)
- DENOTES SURFACE DRAINAGE FLOW

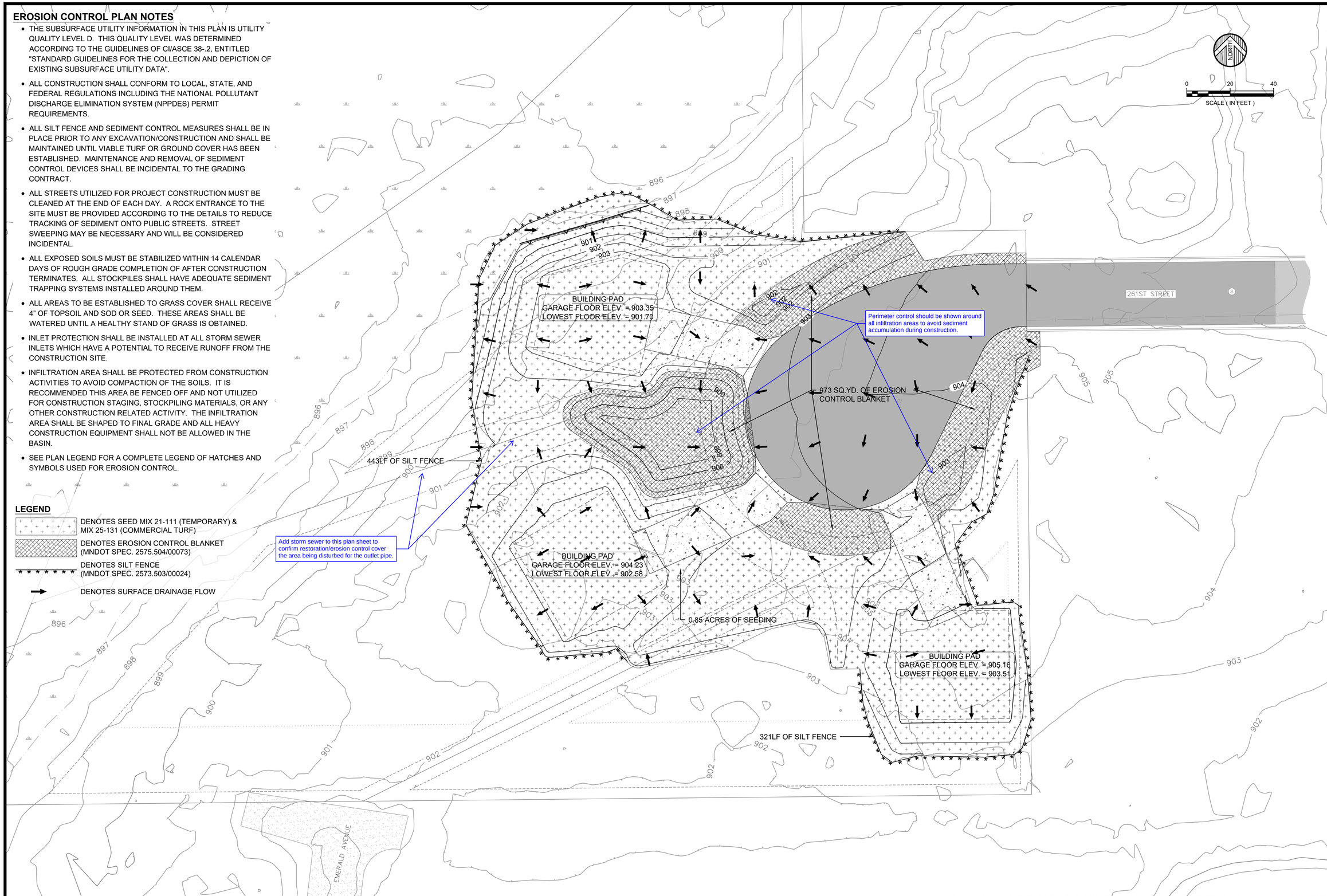

WIDSETH
ARCHITECTS ▪ ENGINEERS ▪ SCIENTISTS ▪ SURVEYORS

I HEREBY CERTIFY THAT THIS PLAN, SPECIFICATION, OR REPORT WAS PREPARED BY ME OR UNDER MY DIRECT SUPERVISION AND THAT I AM A DULY LICENSED PROFESSIONAL ENGINEER UNDER THE LAWS OF THE STATE OF MINNESOTA.

TIMOTHY M. NOALE DATE: 09/24/2021 LIC. NO. 25132

DATE	REV#	REVISIONS DESCRIPTION	BY
11/06/2020		ADDRESS CITY COMMENTS	ADB
12/08/2021		ADDRESS 100-YR STORM	

DATE: AUGUST 2021
SCALE: AS SHOWN
DRAWN BY: ERC
CHECKED BY: TMH
JOB NUMBER: 2020-10572

DIAMOND RIDGE - EMERALD AVENUE
BRINKMANN CUSTOM HOMES
WYOMING, MN

EROSION CONTROL PLAN

SHEET NO.
C8.0

J:\Beckmann Custom Homes-44746\2020-10572\CADD\Civil\C-ER-2020-10572.dwg Plotted by:Joshua Rebennack 12/8/2021 2:28:15 PM

© 2021 WIDSETH

UTILITY PLAN NOTES

- THE SUBSURFACE UTILITY INFORMATION IN THIS PLAN IS UTILITY QUALITY LEVEL D. THIS QUALITY LEVEL WAS DETERMINED ACCORDING TO THE GUIDELINES OF CI/ASCE 38-.2, ENTITLED "STANDARD GUIDELINES FOR THE COLLECTION AND DEPICTION OF EXISTING SUBSURFACE UTILITY DATA".
- THE ENGINEER HAS MADE AN ATTEMPT TO SHOW ALL PUBLIC UTILITIES WITHIN THE CONSTRUCTION LIMITS OF THIS PROJECT. PUBLIC UTILITIES SHOWN ON THIS PLAN WERE DRAWN USING FIELD SURVEY INFORMATION AND MAPS PROVIDED TO THE ENGINEER BY THE UTILITY COMPANIES AS A RESULT OF A GOPHER STATE ONE CALL DESIGN LOCATE REQUEST. IT IS THE CONTRACTORS RESPONSIBILITY TO VERIFY THESE LOCATIONS PRIOR TO BIDDING AND CONSTRUCTING THE PROJECT.
- PRIVATE UTILITY LOCATES ARE TO BE COORDINATED WITH THE ENGINEER. THE PRIVATE LOCATES WILL BE DONE BY GOPHER STATE ONE CALL. THE CONTRACTOR SHALL BE RESPONSIBLE FOR ALL EXCAVATION LOCATES AND SHALL NOTIFY ALL AFFECTED UTILITY COMPANIES AT LEAST 48-HOURS BEFORE CONSTRUCTION.
- UNLESS OTHERWISE NOTED, ALL MATERIALS, CONSTRUCTION TECHNIQUES AND TESTING SHALL CONFORM TO THE 2013 EDITION OF THE "STANDARD SPECIFICATIONS FOR TRENCH EXCAVATION AND BACKFILL/SURFACE RESTORATION, WATERMAIN AND SERVICE LINE INSTALLATION AND SANITARY SEWER AND STORM SEWER INSTALLATION" AS PUBLISHED BY THE CITY ENGINEERS ASSOCIATION OF MINNESOTA AND THE "STANDARD SPECIFICATIONS FOR CONSTRUCTION" AS PUBLISHED BY THE MINNESOTA DEPARTMENT OF TRANSPORTATION, 2018 EDITION. THE CONTRACTOR SHALL BE REQUIRED TO FOLLOW ALL PROCEDURES AS OUTLINED BY THE LOCAL AGENCY AND THE MINNESOTA PLUMBING CODE. THE CONTRACTOR SHALL REQUIRE ALL PROCEDURES AS OUTLINED BY THE LOCAL AGENCY.
- THE CONTRACTOR SHALL RECEIVE THE NECESSARY PERMITS FOR ALL WORK OUTSIDE THE PROPERTY LIMITS.
- COORDINATE SERVICE LOCATION ENTRIES WITH THE MECHANICAL ENGINEER.
- WATER SERVICE LINES SHALL BE INSTALLED WITH A MINIMUM OF 8.5 FEET OF COVER.
- RIM ELEVATIONS REFLECT A SUMP OF 0.05 FEET.
- STORM SEWER OF DIFFERING DIAMETERS SHALL MATCH 0.8 DIAMETER GRADE LINE ELEVATIONS AT CATCH BASIN OR MANHOLE JUNCTIONS.
- PROVIDE WATER MAIN THRUST RESTRAINTS PER CITY STANDARD REQUIREMENTS.
- A MINIMUM OF 18 INCH VERTICAL SEPARATION SHALL BE REQUIRED AT ALL WATER MAIN CROSSINGS WITH SANITARY SEWER AND STORM SEWER.
- UTILITY SERVICES TERMINATE 5 FEET OUTSIDE THE BUILDING WALL UNLESS OTHERWISE STATED. SEE ARCHITECTURAL PLAN OR MECHANICAL PLAN FOR EXACT LOCATION AND CONSTRUCTION DETAILS FROM BUILDING WALL TO 5 FEET OUTSIDE BUILDING WALL.
- HDPE STORM SEWER PIPE SHALL MEET THE REQUIREMENTS OF AASHTO M294, TYPE S WITH WATER TIGHT JOINTS. PVC STORM SEWER SHALL BE SCHEDULE 40 PIPE. FLARED ENDS SHALL BE RCP WITH TRASH GUARDS AND RIP RAP.

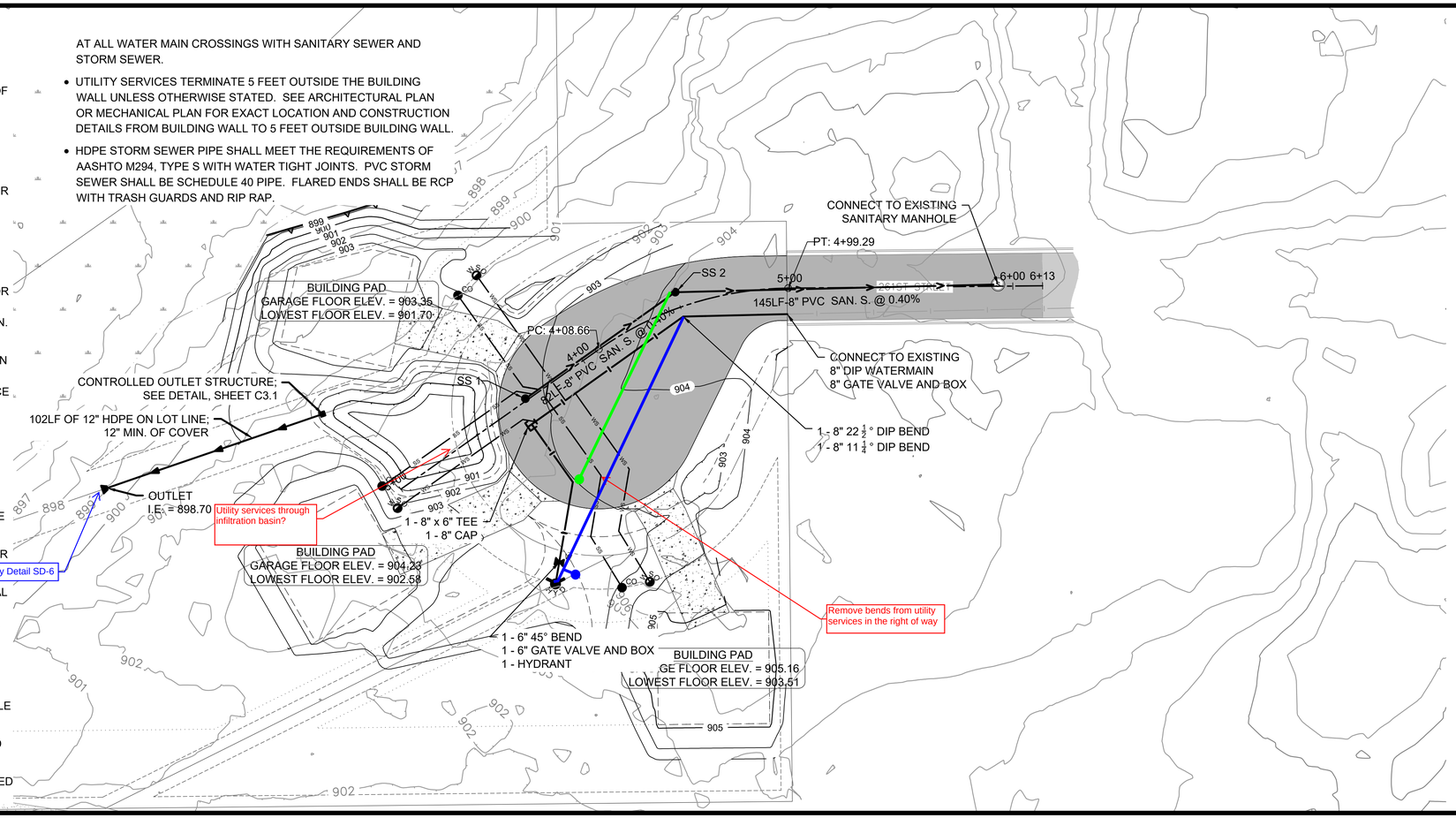

EMERALD AVENUE

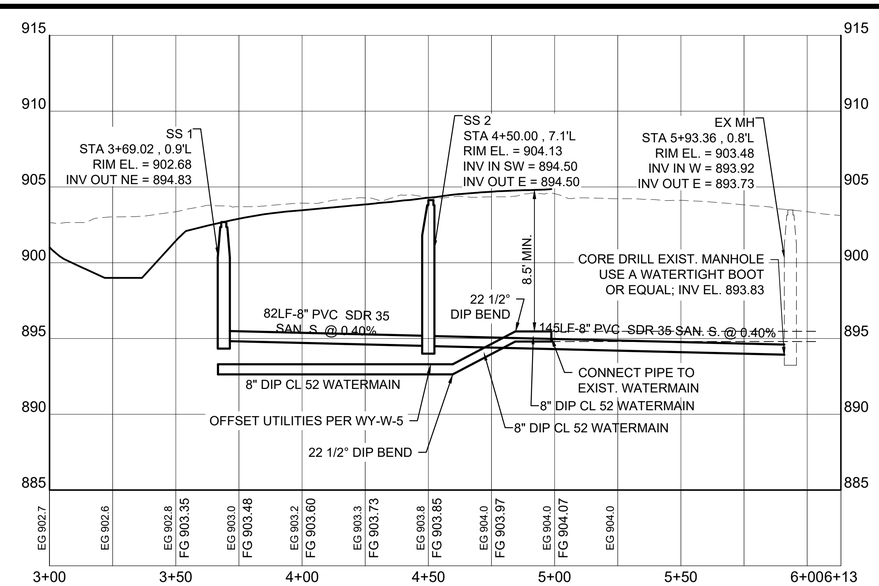

J:\Beckmann Custom Homes-44746\2020-10572\CADD\Civil\C-UT-2020-10572.dwg Plotted by:Joshua Rebennack 12/8/2021 2:29:07 PM

© 2021 WIDSETH

WIDSETH
ARCHITECTS ▪ ENGINEERS ▪ SCIENTISTS ▪ SURVEYORS

I HEREBY CERTIFY THAT THIS PLAN, SPECIFICATION, OR REPORT WAS PREPARED BY ME OR UNDER MY DIRECT SUPERVISION AND THAT I AM A DULY LICENSED PROFESSIONAL ENGINEER UNDER THE LAWS OF THE STATE OF MINNESOTA.

TIMOTHY M. HOULE DATE: 09/24/2021 LIC. NO. 25132

DATE	REV#	REVISIONS DESCRIPTION	BY
11/05/2020		ADDRESS CITY COMMENTS	AGB
12/09/2021		ADDRESS 100-YR STORM	

DATE: AUGUST 2021
SCALE: AS SHOWN
DRAWN BY: ERC
CHECKED BY: TMH
JOB NUMBER: 2020-10572

DIAMOND RIDGE - EMERALD AVENUE
BRINKMANN CUSTOM HOMES
WYOMING, MN

UTILITY PLAN & PROFILE

SHEET NO.
C9.0

RESERVED FOR RECORDING DATA

RESOLUTION NO. 22-01-08

RESOLUTION APPROVING THE PRELIMINARY PLAT OF "RE-PLAT OF DIAMOND RIDGE" AT PROPERTY IDENTIFICATION NUMBERS 21.00040.01, 21.00040.02, 21.00040.03, 21.00040.04, 21.00040.05, and 21.00040.06

WHEREAS, the City of Wyoming is a political subdivision, organized and existing under the laws of the State of Minnesota; and,

WHEREAS, the City Council of the City of Wyoming has adopted zoning and subdivision regulations, per Ordinances 2009-4 and 2010-08, including subsequent amendments, to promote the orderly, economic and safe development and utilization of land within the City; and,

WHEREAS, Beckman Custom Homes LLC has applied for approval of the Preliminary Plat of Subdivision for the creation of three lots on property legally described as:

Block 1, Lots 1, 2, 3, &4 and Block 2, Lots 1 & 2, Diamond Ridge.

WHEREAS, on September 14, 2021, the Planning Commission held a public hearing in accordance with the Ordinance and laws of the State of Minnesota; and,

WHEREAS, the City Council and Planning Commission have reviewed the application, as submitted, and have made the following findings of fact:

1. The requirements of Article III, Division 2, “The Preliminary Plat”, as contained in the City of Wyoming Subdivision Ordinance have been complied with.

NOW, THEREFORE, BE IT RESOLVED, that the City Council of the City of Wyoming hereby **GRANTS** the Preliminary Plat as requested by the applicant with the following conditions:

1. That all engineering comments from the City Engineer must be addressed prior to review of the final plat.
2. That De Minimis application be approved prior to review of the final plat.
3. That after the City Engineer has approved the construction plans and specifications; new construction plans that reflect the approved revisions are submitted to the City (three full size and two reduced sets).
4. That all required local, state, and/or federal permitting must be obtained and proof of such permits submitted prior to the pre-construction conference with staff.
5. If By-laws, Property Owner's Association Articles of Incorporation, and/or Protective Covenants are to be established for the lots, said instruments must first be approved by the City Attorney.
6. The Developer must sign the City standard Stormwater Management Facility Maintenance Agreement.
7. Development Agreement, the terms and provisions of which must be approved by the City Attorney, between the property owner, the developer and the city, must be executed prior to construction beginning on the improvements in the development.
8. A surety in the form of a cash deposit or letter of credit guaranteeing to complete the work in substantial compliance with the approved street, utility, grading, and drainage plans. The surety must remain in place until the site work is complete and approved by the city. The City Engineer must approve the surety amount and the City Attorney must approve the terms if a letter of credit is used.

ADOPTED BY THE CITY COUNCIL OF THE CITY OF WYOMING THIS 4th DAY OF JANUARY 2022.

_____
Lisa Iverson, Mayor

ATTEST:

This Document Drafted by:
The City of Wyoming
26885 Forest Boulevard
Wyoming, Minnesota 55092

_____
Robb Linwood, City Administrator

APPROVED MINUTES
PLANNING COMMISSION
CITY OF WYOMING, MINNESOTA
APRIL 13, 2021
7:00 PM

CALL TO ORDER:
Planning Commission Chairman Lobermeier called the Regular Meeting of the Wyoming Planning Commission for April 13, 2021 to order at 7:00 PM

CALL OF ROLL:
On a Call of the Roll the following members of the Wyoming Planning Commission were present: Mark Lobermeier, Kevin Teel, Bryan Murdock, Katie West, and Roger Carr.

ABSENT: None

Also Present: Fred Weck, Zoning Administrator; Robb Linwood, City Administrator; Council Liaison Brett Ohnstad; Mayor Lisa Iverson; and Tom Ramler-Olson, City Planner - WSB

DETERMINATION OF A QUORUM:

PLEDGE OF ALLEGIANCE:

OPEN FORUM: NONE

APPROVAL OF MINUTES:

1. **Consider approving the minutes of the "Regular Meeting" of the Wyoming, Minnesota Planning Commission for March 23, 2021**

   A MOTION WAS MADE BY COMMISSIONER CARR, SECONDED BY COMMISSIONER WEST, TO APPROVE THE MINUTES OF THE "REGULAR MEETING" OF THE WYOMING, MINNESOTA PLANNING COMMISSION FOR MARCH 23, 2021 AS SUBMITTED.

   Roll Call Vote:
   Voting Aye: *Murdock, West, Teel, Carr, and Lobermeier*
   Voting Nay: *None*
   Abstain: *None*
   Absent: *None*

NEW BUSINESS - A:

2. Sketch Plan: D-21-004 Diamond Ridge
Location: Emerald Avenue
Applicant: Beckman Custom Homes; Charles (Chuck) Beckman
Property ID Numbers: 21.00040.01 and 21.00040.06

Chuck Beckman, Beckman Custom Homes, gave a brief history on the background of this property. He explained that he was under the impression that this was a recorded plat. He stated that he is assuming it was approved in 2006 with all of the homes to have full basement walk-outs, but the individual that owned it let the property go for back taxes and then someone else bought it and he is not sure of the details on that purchase. He stated that he is now third in line and explained that he was told that he would just need to bring everything up to what the current standards are, however, he has not been able to get anything to fit there. He stated that he has met with Zoning Administrator Weck to discuss

the possibility of rezoning to a PUD and would most likely need some variances.

City Planner Ramler-Olson gave a brief overview of the subdivision request to create 10 lots for detached, single-family townhomes that will be served by City sewer and water. It is a continuation of what was originally platted in 2006, but has been modified and increased from 6 lots to 10 lots. He noted that the staff report includes some measurements that are proposed and identifies some approvals based on what has been submitted thus far. He explained that there is a need to obtain a 10 feet wide front yard utility easement to accommodate the request to reduce front yard structure setbacks. A variance will also be required to reduce the minimum setback to approximately 22 feet and noted that staff supports that measurement, but anything less than that, staff would see potential conflicts with accommodating cars that are parked, front-loaded, into the driveway. He reviewed the setback requirements and the possibility for variances to reduce them. He stated that staff has identified that there are required easements that will need to be secured along each side of each lot. He offered to answer Commission questions and give them more detail if they were interested.

Commissioner West asked if there had been any consideration into having less lots in order to accommodate some of the setback requirements, since the original plan was for only 6 lots.

Mr. Beckman stated that they ran into issues getting everything to fit and also the overall cost associated with running the sewer and water through, so they were looking for more units because it was increasing the cost of the lots too high so the land value ratio would have been out of whack relative to the total price of the home package.

Commissioner Murdock stated that the setbacks on the north properties from the street being only about 14 feet and the City is looking for at least 22 feet, with the minimum setbacks in the back of 10 feet. He asked how the City can approve building in those particular lots without the structure getting smaller.

City Planner Ramler-Olson reviewed the four lots that Commissioner Murdock was referring to and explained that what is shown is a 50 foot right-of-way, so there should be approximately 11 feet on either side in order to add more room from the edge of the curb to the face of the garage. He explained that would end up being 11 feet added onto the 14 feet may be able to accommodate the length of a full vehicle. He noted that what was not shown on the sketch plan are the actual curbs that would line Emerald Avenue which would add more depth.

Commissioner Murdock asked about the setbacks to the wetland boundary.

City Planner Ramler-Olson explained that the wetland setback that staff was comfortable with of 10 feet was irrespective of the physical constraints that are present and they were merely reacting to people's need to move around the structures and however that setback is accommodated they would strongly urge a rethinking and noted that there are some instances where that is possible.

Commissioner Teel stated that he was able to drive to this parcel and asked how this was laid out back in 2006 when it was approved for 6 lots.

Zoning Administrator Weck noted that he could share this information is the Commission could give him a few minutes. He suggested that they continue asking questions while he accessed the file.

Commissioner Teel asked if there was any reach out to residents of the development back there because this proposal does not match that development. He stated that he would like to know if any of the neighbors were concerned about putting a detached townhome in a development where there are larger lots.

City Planner Ramler-Olson stated that he is unsure if the applicant reached out to the adjacent neighborhood. He noted that the difference between what is being proposed today and what was approved in 2006, are the wetland setbacks. He stated that he does not believe the 30-foot wetland setback existed in 2006, so that is what is posing a considerable constraint with this proposal and influencing the layout being presented.

Commissioner Teel stated that from what he could see by driving around is that the land is very low and

asked if by putting 10 lots instead of 6 lots, if it would hinder the wetlands and questioned if there were guidelines that would need to be followed if they are putting more structure on that land.

Zoning Administrator Weck gave an overview of the original preliminary plat that had 6 walk-out lots. He stated that this began as a 100-acre parcel and the 80 acres to the northwest was all wet and was turned into wetland banking credits. He noted that the watershed district was sent a copy of the sketch plan and noted that they also have buffer rules but is unsure where their line may end up. He agreed that the ground is fairly wet, but where the road is going through is sort of the high spot.

Chair Lobermeier explained to Mr. Beckman that the goal of tonight is to give him some direction and hoped that he could see that the City wanted to work with him and get something that will fit this parcel despite the challenges of making the setbacks work and still get an economically viable project. He asked Mr. Beckman to continue to work with staff to see what can fit. He asked if there had already been discussion about using a PUD in this instance.

Zoning Administrator Weck stated that it was discussed however the issue with a PUD is that there is a trade-off, which is the green space area. He stated that if Mr. Beckman still had the outlot as part of this development it could have become the greenspace area, however that parcel is now owned by a neighbor.

Chair Lobermeier stated that it will take some creativity to get something to work in this situation, but the City is trying to work with him to get something to function in this location.

Mr. Beckman stated that he appreciates the input from the Commission and noted that they were looking for guidance so they weren't just throwing darts and hoping something would stick.

Chair Lobermeier suggested Mr. Beckman may want to put the setbacks on the plans first and then see what he can get to fit.

SCHEDULED PUBLIC HEARINGS:

3. Rezoning: 0-21-001 Rural Residential I District (R1) to Office and Health Care District (OHC)
Conditional Use Permit: C-21-001 for a Planned United Development in the Shoreland District and a Residential Development Consisting of Housing Restricted to the Elderly including Independent Living.
Preliminary Plat: D-21-005 Approval of the Preliminary Plat "Heims Lake Villas North"
Location: 257th Street and Fairview Avenue
Applicant: J. Johnson Development, LLC; Jaren Johnson
Property ID Numbers: 21011122.00 and 21.11123.00

Zoning Administrator Weck stated that he had not received any notification of anyone who would like to speak to this issue.

City Planner Ramler-Olson gave an overview of the request for Preliminary Plat approval, a Conditional Use Permit, and rezoning from R1 to Office and healthcare. He noted that the subject property is two properties that are both located north of the original Heims Lake development. This will create 33 single family lots for detached villas that will be served by sewer and water. There will also be a connection to 257th Street at two locations. They are requesting a rezoning to Office Healthcare in order to align with its guided land use in the most recent Comprehensive Plan. The applicant is proposing to design the subdivision for 55+ community. He noted that these two parcels comprise about 20 acres, however there is only about 13 acres that is upland so there will need to be come accommodations made for smaller sites. The fire department has requested an additional hydrant in the open area north of Lot 1, Block 1. Staff has reviewed all the criteria, there were no red flags and found the proposal met all criteria. Staff is recommending approval with the conditions listed in the report.

Commissioner Teel asked if there would be a crosswalk installed at either entrance so people can get to the bike path. He stated that he would just like there to be a crosswalk somewhere in the area so people can get around and get to the walking path

Jaren Johnson stated that he agreed a cross walk in this location is a good idea.

Commissioner Teel asked if the original drainage pond would be used as part of this project.

Mr. Johnson stated that Block 2 is intended to be an infiltration idea and explained that it would not hold water, but will be similar to what is in place in the First Addition. He stated that it is intended to hold water for a big rain event but clarified that it is not a pond with visible water.

Chair Lobermeier asked Mr. Johnson to share a bit about his development.

Mr. Johnson stated that his plan is to have the same basic idea that he used for the first phase. He stated that he is hopeful that watershed district won't ask him to take the down the trees in the back because he would like to keep that area unique because it hasn't been touched for about 70 years.

MOTION BY TEEL, SECONDED BY WEST, TO OPEN THE PUBLIC HEARING FOR THE REZONING, CONDITIONAL USE PERMIT, AND PRELIMINARY PLAT REVIEW FOR PID 21.11122.00 AND 21.11123.00 FOR "HEIMS LAKE VILLAS NORTH".

Roll Call Vote:
Voting Aye: *Murdock, West, Teel, Carr, and Lobermeier*
Voting Nay: *None*
Abstain: *None*
Absent: *None*

There were no comments.

MOTION BY CARR, SECONDED BY MURDOCK, TO CLOSE THE PUBLIC HEARING FOR THE REZONING, CONDITIONAL USE PERMIT, AND PRELIMINARY PLAT REVIEW FOR PID 21.11122.00 AND 21.11123.00 FOR "HEIMS LAKE VILLAS NORTH".

Roll Call Vote:
Voting Aye: *Murdock, West, Teel, Carr, and Lobermeier*
Voting Nay: *None*
Abstain: *None*
Absent: *None*

MOTION BY WEST, SECONDED BY CARR, TO APPROVE THE REZONING, CONDITIONAL USE PERMIT, AND PRELIMINARY PLAT FOR PID 21.11122.00 AND 21.11123.00 FOR "HEIMS LAKE VILLAS NORTH", WITH THE CONDITIONS AS LISTED IN THE STAFF REPORT.

Roll Call Vote:
Voting Aye: *Murdock, West, Teel, Carr, and Lobermeier*
Voting Nay: *None*
Abstain: *None*
Absent: *None*

Chair Lobermeier noted that this will go before the City Council on April 20, 2021.

Mr. Johnson stated that Mr. Beckman has a nice idea for his project and would be open to having a conversation with him about it.

Zoning Administrator Weck stated that he will let Mr. Beckman know that Mr. Johnson is interested in perhaps having a conversation about that project.

NEW BUSINESS – B:

4. Sketch Plan: D-21-002 Sunrise Riverbank
Location: East Viking Boulevard, Greenwood Golf Course Site
Applicant: Northern Tier Development, LLC; Gerald Green
Property ID Numbers: 21-00009.30, 21.00012.00, 21.10298.30, 21.10298.40, 21.10302.00, 21.10320.10, 21.10320.20 and 21.10320.30

Gerald Green gave a brief overview of his plans for this property. He stated that this would re-subdivide the 222 acres into three separate lots each with a distinct zoning district. He stated that one would be agriculture and create a wetland bank, Outlot A would be for 17 residential lots, and Outlot B would be commercial and may eventually hold a hotel. He stated that he would like to hold off on discussion surrounding the Outlots tonight because there still needs to be more discussion between them, staff, and the County, but explained that they would like feedback on the 190 acres that are wet and would like to be zoned Agriculture.

City Planner Ramler-Olson stated that the bulk of the staff report was focused on the proposed residential lots. He noted that the current zoning is not in line with what the Comprehensive Plan shows and explained that it is guided for Mixed Use in the Comprehensive Plan. Staff feels that this proposal needs to be reworked to accommodate what is laid out in the Comprehensive Plan and plans to have this area served by City water and sewer.

Chair Lobermeier stated that it may be difficult for the Commission to only give feedback on only the wetland bank portion of the property. He stated that this is a very difficult site particularly with the wetland areas to the north. He stated that he believes the City is looking for developable opportunities, however, he is personally a little hesitant to embrace a wetland bank for the entire property and would encourage Mr. Green to see if there are ways to find more developable land without sacrificing that much of what appears to be there.

Mr. Green stated that this property has been through hydrology studies, water table studies, and some modeling tests to determine where the water is located on this property. He explained that there is a lot of water and noted how spongy the ground was even back when it was farmed. He noted that the last modeling that they had in mind for the single-family homes, they maximized as much as they could with safe soils. He noted that for Outlot B their modeling shows that it is suitable for a 70-unit hotel. He explained that because of the situation with the water and the tower on the other side of the road he doesn't think the Commission should even discuss Outlot A and Outlot B at this point. He stated that they plan to have had more meetings with staff to find out what can be done.

Zoning Administrator Weck stated that the Commission does need to consider the Outlots because once the rest of the land is put into a wetland bank, it is no longer available, and so it needs to be part of the discussion. He stated that agrees that the use of the Outlots is a future discussion.

Commissioner Murdock showed the County wetland map so the Commission could look more closely at the area in question.

Chair Lobermeier stated that there is no question that there is a lot of wetland on the property. He stated that the next step for Mr. Green is to take his concept and evolve it a bit further, whether that will be on the developable lots of the other areas.

Nick Haus, asked if there was anything they could do to convince the Commission and staff of the state of the area included in the wetland area being undevelopable.

Chair Lobermeier stated that this is an unusual situation because normally the Commission is pointing out places that people cannot develop so this is a bit of a role reversal because they are asking them to consider developing more of this land. He suggested that it may be helpful if the City is given more detailed information about things like the water table.

Mr. Haus stated that Barr Engineering did a hydrology study which he thought was shared with staff that modeled what would happen if the ditches in the northwest part of the bank were plugged and showed what would happen to the water table around the residential lots and over to the hotel lot. He stated that it showed that there would be around a 10-inch water table rise which is what many of the lot lines were based and essentially showed what would be too wet to develop. He stated that there is still a bit of upland buffer that is included in the wetland mitigation bank which was intended to provide a buffer from the residential activities and the wetlands for protection purposes. He stated if anything was to be evaluated, he would say it would be that 200-foot strip, but does not think there is much else beyond that.

Chair Lobermeier asked if the ditches he was referring to are private.

Mr. Haus stated that there is a main ditch that runs under the interstate and follows the eastern side of the property which will remain unplugged and open, but noted that the lateral ditches will be plugged as part of the wetland banking process.

Chair Lobermeier stated that it seemed like the premise is to block the ditches in order to create the wetland bank and when that happens it will cause a rise in the water table which then creates even more of a constraint for development that could occur. He stated that the past development proposals that did not include a wetland bank and had planned to maintain a drained condition by either maintaining the ditches or rerouting the water which is why they were able to present more possible lots.

Mr. Haus noted that he cannot comment on other plans because there was never any applications made to BWSR or the Corps of Engineers and have just been proposals. He noted that none of them would have actually been vetted by State agencies or gone through the sequencing process for wetlands. He stated that he is fairly sure that none of those proposals would have made it through that process.

City Administrator Linwood stated that Mr. Haus brought up a point that at a staff level they have discussed regarding the wetland setback and that it may be a request that the City askes WSB to look at this and possibly request it be reduced with the idea of the possibility of more developable land.

Mr. Green stated that he understands that previous proposals looked to bring New York City onto this site which the City found exciting, but the reality is that you cannot build on ground that isn't solid and believes what he has presented is a realistic expectation of what can be put on this land.

Commissioner Murdock asked if there was any opportunity in the wetland mitigation area for any type of park or dedication for anything with the upland area. He asked if the mitigation would end up swamping the upland areas.

Mr. Green explained that once it is put into a mitigation bank, there are regulations about what can and cannot be done.

Mr. Haus stated that it would be qualified as a wetland, but it would not be anything that people couldn't walk on and there will be a conservation easement placed over the lands so it would then be up to the applicant on what they want to do in terms of access. He stated that Mr. Green could work with the City to allow public access onto the property. He stated that it would have to be a more natural area without motorized vehicles.

Zoning Administrator Weck stated that staff will continue to work with Mr. Green and Mr. Haus on this project.

5. Final Plat: D-21-003 Hunter Hill (formerly Aadland West)
Location: Pioneer Road and Hunter Avenue
Applicant: PPP Aadland, LLC; Perry Aadland
Property ID Number: 21.10387.30

City Planner Ramler-Olson stated that this is a Final Plat review of the remaining 14 lots of the original 15 from the subdivision. He noted that the proposed lots meet the lot width, depth and the R2 zoning district requirements. He stated that it was discussed at the Sketch Plan review in February of 2019 that the 2.36-acre density would conflict with the Comprehensive Plan guidance with regard to future land use category provisions, however, the Commission discussed the low likelihood of the area being serviced by City sewer and water. He stated that it was found that the proposed density is appropriate and does comply with the Comprehensive Plan. He noted that soil borings have been done that identify that there is enough land on each lot to accommodate private septic. Staff recommends approval with the conditions included in the staff report.

Commissioner Murdock asked about the tree clearing happening on the site.

Mr. Aadland stated that the tree clearing is really just clearing trees that should have been cleared long ago. He stated that the crop land has been shrinking over the last 30 years or so because trees grew or fell over and weren't taken care of. He stated that he is really just doing some tidying up on the land and removing dead trees in some of the wooded areas.

Commissioner Teel asked if this type of development required any kind of walking path or sidewalk because there is nothing along Pioneer Road to connect to.

Zoning Administrator Weck stated that the Joint Park Planning Board did discuss a trail along the frontage of Pioneer Road, but one property owner did not want to participate and the cost to put it in along the shorter section did not warrant it, especially because it wasn't going anywhere. He clarified that for right now, there is nothing planned for this development because it was just be a 600-foot trail and that is all. He stated that the Joint Park Planning Board recommended a cash dedication for this project.

MOTION BY COMMISSIONER MURDOCK, SECONDED BY COMMISSIONER WEST, TO RECOMMEND APPROVAL OF THE FINAL PLAT FOR HUNTER HILL (FORMERLY AADLAND WEST), PID #: 21.10387.30, SUBJECT TO CONDITIONS AS LISTED IN THE STAFF REPORT.

Roll Call Vote:	
Voting Aye:	*Murdock, West, Teel, Carr, and Lobermeier*
Voting Nay:	*None*
Abstain:	*None*
Absent:	*None*

OLD BUSINESS:

6. Comprehensive Plan Update (If time allows)

Chair Lobermeier noted that he has been speaking with City Engineer Erichson about the water and sewer sections as well as the road section. He stated that since that time, City Engineer Erichson has had conversations with City Administrator Linwood and Zoning Administrator Weck which determined that WSB was going to update their water and sewer model so the Comprehensive Plan will be based on updated numbers. He stated this was not part of the original proposal, but now sees that it will make the most sense for them to update that model. He stated that he expects the updates as well as comments on the sections he has asked City Engineer Erichson to look over be ready for discussion by the next meeting. He stated that the Park Advisory Commission has also had a chance to review their section and gave a favorable review of the Comprehensive Plan. Their only comment they had was regarding a comment that he had made that the City was not looking for additional park land. He stated that they had asked that comment not to be included because there may be a time in the future where the City would like to see additional park land.

COMMUNICATIONS:

Zoning Administrator Weck noted that City Administrator Linwood has invited the EDA to attend the next Planning Commission meeting but does not think there will be any development applications for the April 27, 2021 meeting.

7. Land Use Training and Education

Zoning Administrator Weck noted that there was a link and information included regarding the Land Use Training and Education. He stated that if anyone on the Commission has not taken the training, he highly recommends it and noted that they can turn in their payment receipt for reimbursement.

UPDATES:

Commissioner Carr asked which sections of the Comprehensive Plan will be reviewed at the next meeting.

Chair Lobermeier stated that the Commission will discuss the chapters up through Natural Environment, Sustainability, and Economic Development.

A MOTION WAS MADE BY COMMISSIONER CARR, SECONDED BY COMMISSIONER TEEL, TO ADJOURN THE APRIL 13, 2021 "REGULAR MEETING" OF THE WYOMING, MINNESOTA PLANNING COMMISSION AT 8:36 PM.

Roll Call Vote:
Voting Aye: *Murdock, West, Teel, Carr, and Lobermeier*
Voting Nay: *None*
Abstain: *None*
Absent: *None*

APPROVED MINUTES
PLANNING COMMISSION
CITY OF WYOMING, MINNESOTA
SEPTEMBER 28, 2021
7:00PM

CALL TO ORDER:
Planning Commission Chairman Lobermeier called the Regular Meeting of the Wyoming Planning Commission for September 28, 2021 to order at 7:00 PM

CALL OF ROLL:
On a Call of the Roll the following members of the Wyoming Planning Commission were present: Mark Lobermeier, Bryan Murdock, Katie West, and Roger Carr

ABSENT: Commissioner Kevin Teel

Also Present: Fred Weck Zoning Administrator, City Engineer Erichson, and City Administrator Robb Linwood

DETERMINATION OF A QUORUM:

PLEDGE OF ALLEGIANCE:

OPEN FORUM: NONE

APPROVAL OF MINUTES:

1. **Consider approving the minutes of the "Regular Meeting" of the Wyoming, Minnesota Planning Commission for August 24, 2021**

   A MOTION WAS MADE BY COMMISSIONER MURDOCK, SECONDED BY COMMISSIONER CARR, TO APPROVE THE MINUTES OF THE "REGULAR MEETING" OF THE WYOMING, MINNESOTA PLANNING COMMISSION FOR AUGUST 24, 2021 AS SUBMITTED.

   Voting Aye: *Murdock, West, Carr, and Lobermeier*
   Voting Nay: *None*
   Abstain: *None*
   Absent: *Teel*

2. **Consider approving the minutes of the "Regular Meeting" of the Wyoming, Minnesota Planning Commission for September 14, 2021**

   A MOTION WAS MADE BY COMMISSIONER MURDOCK, SECONDED BY COMMISSIONER WEST, TO APPROVE THE MINUTES OF THE "REGULAR MEETING" OF THE WYOMING, MINNESOTA PLANNING COMMISSION FOR SEPTEMBER 14, 2021 AS SUBMITTED.

   Voting Aye: *Murdock, West, Carr, and Lobermeier*
   Voting Nay: *None*
   Abstain: *None*
   Absent: *Teel*

SCHEDULED PUBLIC HEARINGS:

3. Preliminary Plat: D-21-010 "Re-Plat of Diamond Ridge"
Location: 261st Street and Emerald Avenue
Applicant: Beckman Custom Homes, LLC – Charles Beckman
Property ID Numbers: 21.00040.01-21.00040.06

City Administrator Linwood gave an overview of the different iterations of this project. He noted that updated plans had been received over the weekend.

City Engineer Erichson explained that the staff report was based on the previous review of plans which had a lack of detail that would allow staff to feel comfortable moving forward with a recommendation for approval. He stated that because of this, their recommendation was to table this application, but explained that over the weekend, the City received plans over the weekend. He stated that they had a brief opportunity to review them and gave a brief overview of the updated plans that appear to have more detailed information surrounding sewer, water, restoration, and repair of the recently constructed roadway.

Commissioner Murdock asked if the plan was simply for blacktop and then grass on the cul-de-sac.

City Engineer Erichson clarified that there would be a gravel shoulder between the blacktop and the grass.

Commissioner Murdock asked if the City would then take over the maintenance of the roadway.

City Engineer Erichson confirmed that the City would take over the maintenance of the roadway. He stated that many of the cities roadways are rural and not urban, but noted that it is a bit unconventional to have the entirely of the development adjacent to it as urban and then three lots at the end be rural.

Commissioner Murdock asked about the possibility of a surmountable curb.

City Engineer Erichson stated that a surmountable curb is a bit easier to plow over.

Chair Lobermeier asked if the applicant was open to other options than just the rural roadway. He explained that the City tries to maintain a certain standard that it is consistent for its entire section.

The applicant stated that if they could find something that would work they would be open to other ideas, but noted that the water has to go somewhere.

MOTION BY COMMISSIONER WEST, SECONDED BY COMMISSIONER CARR, TO OPEN THE PUBLIC HEARING AT 7:15 PM.

Voting Aye:	*Murdock, West, Carr, and Lobermeier*
Voting Nay:	*None*
Abstain:	*None*
Absent:	*Teel*

Holly Lance, 4805 261st Street, stated that they just paid a whole lot of money for new roads and curb and gutter which means the neighborhood is urban. She stated that she would like it to stay the same. She stated that the landscape dips quite a bit and asked if there was going to be erosion issues or whether the developer would need to haul in a lot of dirt. She asked if the project would meet all the environmental laws.

City Engineer Erichson stated that the project would meet all the environmental laws.

Ms. Lance stated that some of her concerns are that she paid extra for the lot because she was told it was woods, next to a wetland and Carlos Avery, and would never be built. She explained that she paid extra for the corner lot for that privacy and the nature. She stated that she is also concerned about construction traffic and stated that she hopes this project is not approved. She asked if they were planning to deforest all the old oak trees.

Chair Lobermeier stated that it will not be clear cut but the City has not seen all the details that show how many trees will be removed but noted that they are allowed to remove trees in order to put the house and driveway in.

Ms. Lance asked if there would be plans to replant trees to make up for the ones removed.

Zoning Administrator Weck stated he thinks even if they clear some trees they will still have the appropriate number of trees on the lot that will be needed.

Ms. Lance stated that she also has concerns about losing her natural privacy fence with the tree line and the bushes. She stated that their neighborhood also has larger lots so the homes are very nicely spaced out and this plan just tries to cram three lots into one small area which takes away from the aesthetics of the neighborhood. She asked about the setback requirements.

Zoning Administrator Weck explained that there is a minimum setback of 10 feet from the side property lines for the main house and for detached buildings it would be 5 feet from the side property line. He noted that it appears as though the plans are 5 feet off of Ms. Lance's property.

Ms. Lance reiterated that the reason they bought this property in the City was for the privacy, nature, and wildlife and would like to see that remain. She stated that there are 70 townhomes coming just south of their neighborhood and 30 other ones coming nearby. She stated that Kettle River Boulevard is very busy and if this moves forward, she would prefer to have a through street because you cannot walk or ride your bicycle safely rather than a cul-de-sac.

City Administrator Linwood noted that the average lot size in the area is about 23,000-24,000 square feet and two of these lots are 42,000 square feet and the other is 23,000 square feet.

Ms. Lance stated that even though the smaller lot is similar in size to her lot, it seems smaller because of its configuration. She noted that there is currently some pooling of water in front of her house when it rains, so drainage would be another concern for her.

City Engineer Erichson noted that the drainage should be going away from her home and to the west.

Kelsey London, 4800 261st, stated that the lot next to their house cuts up basically to their driveway so there is an odd pie shape that comes off their driveway. There is a massive tree in the front yard that crosses onto both lots and asked if that tree would be taken down.

Chair Lobermeier stated that at this point, they do not know.

The applicant stated that he did not see a reason that the tree would have to come down.

Kasey Lance, 4805 261st, stated that based on the plans, his biggest concerns would be the site lines from the back of their home. He stated that the house to their west just being 10 feet off their property line means they will be staring directly at the front of their neighbor's home where they have big windows.

Ms. Lance stated that she would like the City to double check the location of their actual property line.

City Engineer Erichson explained that confirming property lines is something that will be done by the developer.

MOTION BY COMMISSIONER MURDOCK, SECONDED BY COMMISSIONER CARR, TO CLOSE THE PUBLIC HEARING.

Voting Aye:	*Murdock, West, Carr, and Lobermeier*
Voting Nay:	*None*
Abstain:	*None*
Absent:	*Teel*

Commissioner Murdock stated that if he were the Lance's, he would be pretty disappointed about the location of the home adjacent to them. He asked why this was the proposed lot configuration and asked if there would be an alternative for moving lot lines to create a bit more separation.

City Engineer Erichson stated that he thinks the lot configuration came about because of the need to avoid wetland impacts as well as other setbacks. He reviewed the wetland impact survey information.

Commissioner Murdock explained that one of things that had been discussed at prior meetings was how important this access was to all of the new residents for kids and bicycles because Kettle River Boulevard is so busy.

Mr. Beckmann explained some of the difficulty they had with bringing everything up to date, particularly the cost of the curb and gutter.

Commissioner Murdock stated the design, as proposed, is disappointing to him, and does not want kids going up the busy Kettle River Boulevard that has no shoulder. He stated that he would like to see some creative solution and figure out a way not to lose that access. He stated that he thinks the plan, as proposed, is configured poorly.

MOTION BY COMMISSIONER MURDOCK, SECONDED BY COMMISSIONER WEST, TO TABLE PRELIMINARY PLAT REVIEW FOR D-21-010 "RE-PLAT OF DIAMOND RIDGE LOCATED AT 261STREET AND EMERALD AVENUE, PROPERTY ID NUMBERS: 21.00040.01-21.00040.06.

Chair Lobermeier noted that he would support this motion and noted that there had been a lot of discussion about reconfiguring the lot and asked if there may be some other solution. He stated that he understands the economic impact for the developer, but also the concern from residents about how this will fit in and work with their neighborhood which he feels is important.

Voting Aye:	*Murdock, West, Carr, and Lobermeier*
Voting Nay:	*None*
Abstain:	*None*
Absent:	*Teel*

Chair Lobermeier asked staff to assist Mr. Beckmann with giving some direction on what the Commission is looking for prior to the next meeting.

Mr. Beckmann stated that, from his perspective, he feels like he is throwing darts at this project in trying to determine what the City will and will not find acceptable. He stated that he is not clear on what flexibility there may be for something like variances. He stated that he would like some

direction and specific guidance about what is acceptable. He stated that for example, the cul-de-sac was truly the only thing that he found could work from a financial standpoint.

Chair Lobermeier stated that he would like to know how many lots it would take to make putting the road through viable.

Commissioner Murdock asked if this moved forward with just blacktop and no curbs if there would be a way to save money on the road. He asked if it could be designed differently or if it had to have curb. He stated that he thinks the City can be more creative with trying to figure it out because he thinks it is very important to have access for the neighborhoods in the area.

Ms. Lance stated that her first priority is no building, but if they absolutely have to build on this parcel, there are a lot of bikers, walkers, and children in the neighborhood. She shared the difficulty of Kettle River Boulevard backing up and explained that she would rather see a through road so everyone can go all the way to the park and ride their bikes somewhere besides Kettle River Boulevard.

Commissioner Carr stated that is huge because the new neighborhood is going in to the south. He stated that the idea is that they will use the nearby park and right now the only way that new community will be able to get there is going via Kettle River Boulevard.

Commissioner West stated that it is important to be mindful of the Comprehensive Plan and how things are zoned. She stated that the City is sort of bound by what those things say and this is zoned R-3. She would like to see a through road and a way to find a solution that works for everybody.

Zoning Administrator Weck reminded the Commission that this item has officially been tabled, so the discussion should not continue tonight.

Ms. Lance expressed her appreciation to the Commission for listening to her concerns and answering their questions.

NEW BUSINESS: NONE

OLD BUSINESS:

4. Comprehensive Plan Update - Maps

Chair Lobermeier stated that the challenge is to decide what they want to show on the Land Use Plan. He stated that currently it looks a lot like a zoning map, but typically a Land Use plan does not have to follow land lines or anything else. He stated that there is a considerable area of the City that is either wet or restricted, such as wetland, water, or Carlos Avery. He stated that he believes that is the largest land use at about 41%. He stated that he would also like to define the Central Business District. He stated that he feels they also need to take a look at the Highway Commercial Zone and where else there will be Industrial areas. He stated that there are a few Mixed Use areas that the City may want to expand and undeveloped Agricultural areas. He noted that he was surprised to see that quite a bit of what is zoned Agricultural has already been developed with residential uses. He stated that there should be a discussion about how the remaining Residential is defined with things like extension of sewer and water or density. He asked if this can be a simpler map and not have all 15 of the Land Use categories.

Commissioner Murdock asked if an option may be to divide things into 4 quadrants so more detail can be shown without being overwhelming and noted that would mean 4 maps rather than just 1. He stated that he does like the idea of simplifying and suggested maybe having a focused work session to look at the different areas.

Chair Lobermeier agreed that may be a good discussion for a work session.

Commissioner Murdock asked Zoning Administrator Weck and Chair Lobermeier to create a list of priorities so the Commission knows which area they will focus on at the work session.

COMMUNICATIONS: None

UPDATES: None

ADJOURN:

A MOTION WAS MADE BY COMMISSIONER MURDOCK, SECONDED BY COMMISSIONER CARR, TO ADJOURN THE SEPTEMBER 28, 2021 "REGULAR MEETING" OF THE WYOMING, MINNESOTA PLANNING COMMISSION AT 8:15 PM.

Voting Aye:	*Murdock, West, Carr, and Lobermeier*
Voting Nay:	*None*
Abstain:	*None*
Absent:	*Teel*

DRAFT MINUTES
PLANNING COMMISSION
CITY OF WYOMING, MINNESOTA
DECEMBER 28, 2021
7:00PM

CALL TO ORDER:
Planning Commission Vice-Chairman Murdock called the Regular Meeting of the Wyoming Planning Commission for December 28, 2021 to order at 7:01 PM

CALL OF ROLL:
On a Call of the Roll the following members of the Wyoming Planning Commission were present: Kevin Teel, Bryan Murdock, and Katie West

ABSENT: Chair Mark Lobermeier and Commissioner Roger Carr

Also Present: Fred Weck Zoning Administrator

DETERMINATION OF A QUORUM:

PLEDGE OF ALLEGIANCE:

OPEN FORUM: NONE

APPROVAL OF MINUTES:

1. **Consider approving the minutes of the "Regular Meeting" of the Wyoming, Minnesota Planning Commission for December 14, 2021**

Vice-Chair Murdock noted a typographical error on the bottom of page one where the word 'buy' should be 'by'.

A MOTION WAS MADE BY COMMISSIONER WEST, SECONDED BY COMMISSIONER TEEL, TO APPROVE THE MINUTES OF THE "REGULAR MEETING" OF THE WYOMING, MINNESOTA PLANNING COMMISSION FOR DECEMBER 14, 2021, AS AMENDED.

Voting Aye:	*Murdock, West, and Teel*
Voting Nay:	*None*
Abstain:	*None*
Absent:	*Lobermeier and Carr*

SCHEDULED PUBLIC HEARINGS: NONE

NEW BUSINESS: NONE

OLD BUSINESS:

2. Preliminary Plat: D-21-010 "Re-Plat of Diamond Ridge"
Location: 261st Street and Emerald Avenue
Applicant: Beckman Custom Homes, LLC – Charles Beckman
Property ID Numbers: 21-00040.01 – 21.00040.06

MOTION BY COMMISSIONER TEEL, SECONDED BY COMMISSIONER WEST, TO REMOVE PRELIMINARY PLAT: D-21-010 "RE-PLAT OF DIAMOND RIDGE" FROM THE TABLE FOR DISCUSSION.

Voting Aye: Murdock, Teel, and West
Voting Nay: None
Abstain: None
Absent: Lobermeier and Carr

Zoning Administrator Weck noted that Mr. Beckman has submitted a few letters to the City that extends the 60 day rule to January 19, 2022 which gives time for the Council to consider this proposal. He stated that Mr. Beckman also submitted a letter attempting to address some of the comments and concerns made by the Planning Commission at the September 28, 2021 meeting as well as a letter that they will put in curb and gutter and will take care of the stormwater. He stated that the City Engineer does not see any problems and is recommending approval of the preliminary plat with the condition that all the engineering comments be addressed. Staff is also recommending approval with the condition that the De Minimis wetland delineation application be completed.

Vice-Chair Murdock asked if the things outlined in the staff comments are reasonable and achievable.

Zoning Administrator Weck stated that staff is confident that the comments on potential issues can all be adequately addressed. He noted that that there will be significant changes made to the construction drawings, but the Preliminary Plat and lot layouts will not be substantially different.

Mr. Beckman stated that he thinks there has been a few instances of miscommunication during this process. He noted that it has been difficult to get the engineers to think outside of their standard box.

MOTION BY COMMISSIONER TEEL, SECONDED BY COMMISSIONER WEST, TO RECOMMEND APPROVAL OF PRELIMINARY PLAT: D-21-010 "RE-PLAT OF DIAMOND RIDGE", LOCATED AT 261ST STREET AND EMERALD AVENUE BY APPLICANT – BECKMAN CUSTOM HOMES, LLC – CHARLES BECKMAN FOR PROPERTY ID NUMBERS 21-00040.01 – 21.00040.06, SUBJECT TO THE CONDITIONS LISTED IN THE STAFF REPORT, AND THE DE MINIMIS APPLICATION.

Voting Aye: Murdock, West, and Teel
Voting Nay: None
Abstain: None
Absent: Lobermeier and Carr

3. Comprehensive Plan Update – Next Steps and Timeline

Zoning Administrator Weck noted that he had put together an updated timeline for the Commission.

Vice-Chair Murdock suggested that any further discussion on the Comprehensive Plan wait until Chair Lobermeier can attend the meeting.

COMMUNICATIONS: NONE

UPDATES: NONE

A MOTION WAS MADE BY COMMISSIONER WEST, SECONDED BY COMMISSIONER TEEL, TO ADJOURN THE DECEMBER 28, 2021 "REGULAR MEETING" OF THE WYOMING, MINNESOTA PLANNING COMMISSION AT 7:12 PM.

Voting Aye:	*Murdock, West, and Teel*
Voting Nay:	*None*
Abstain:	*None*
Absent:	*Lobermeier and Carr*

Date: December 28, 2021

Presented to: Mayor Iverson and City Council Members
Presented by: Public Safety Director Neil Bauer
Department: Public Safety
Reference: Vehicle Purchase
Method: New Business

***Background Information*:**

In December of 2021, a 2020 Ford Police Interceptor marked squad was involved in a crash. Based on initial damage estimates, the League of MN Cities has deemed the vehicle a total loss. As a result, a replacement vehicle will need to be purchased in 2022. The cost of a 2022 Ford Utility Police Interceptor, equipped, with an extended warranty is estimated at $47,578.38. Insurance reimbursement will fund approximately 75% of the cost, leaving a balance of $14,047.10 not covered by the insurance reimbursement. We will be reselling three decommissioned police vehicles in 2022 (see below), recovering approximately $7,500 for each vehicle (based on prior auction resales), for a total of $22,500. This vehicle will be assigned as a marked squad with an expected end of life in 3 years with over 100,000 miles.

In addition, we have two police vehicles due for replacement this year based on the fleet management strategy. The first vehicle is a 2015 Ford Utility Police Interceptor (#202) with 103,356 miles and the second vehicle is a 2017 Ford Utility Police Interceptor (#207) with 83,287 miles on it. These vehicles will be decommissed and sold at auction once they exceed 100,000 miles, with the proceeds directed to the CIP fund.

As previously indicated, the cost of the replacement vehicles equipped, with an extended warranty is estimated at $47, 578.38. These vehicles will be funded from the 2022 Police CIP Fund. These vehicle will be assigned as a marked squad with an expected end of life in 3 years with over 100,000 miles.

Pricing was obtained throught the Minnesota cooperative purchasing state contract.

PUBLIC SAFETY
P.O. Box 188, 7665 Wyoming Trl., Wyoming, MN 55092
Phone: 651-462-0577 Fax: 651-462-0506

***Recommendation*:**

To authorize the purchase of and equipping three Ford Utliltiy Ford Inverceptor SUV vehicles for Public Safety at the cost of $142,735.14.

Neil Bauer
Public Safety Director

RESOLUTION NO. 22-01-09

A RESOLUTION TO AUTHORIZING THE PURCHASE OF THREE FORD UTILITY INTERCEPTOR SUV VEHICLES FOR A TOTAL AMOUNT OF $142,735.14

.

WHEREAS, The Wyoming Public Safety Department has two vehicles due for replacement as they are nearing the 100,000 miles/6 year allocated service life, and

WHEREAS, The Wyoming Police department had a 2020 Ford Utility Police Interceptor involved in a crash that has been deemed a total loss by the League of Minnesota Cities Insurance Trust

WHEREAS, The Wyoming Police Department requests replacing this squad with three 2022 Hybrid Police Utility Vehicle, and

WHEREAS, These vehicles have a lower operational cost than existing public safety vehicles used for the same purpose due to it's hybrid features;

THEREFORE BE IT RESOLVED, The City of Wyoming authorizes the purchase of three 2022 Hybrid police utility vehicle for a cost of $142,735.14.

This resolution was adopted by the Wyoming City Council of the City of Wyoming on the 4th day of January, 2022

CITY OF WYOMING

By:

_____
Lisa Iverson, Mayor

ATTEST:

_____
Robb Linwood, City Administrator/Clerk

December 30, 2021

Robb Linwood, City Administrator
Wyoming City Hall
26885 Forest Boulevard
Wyoming, Minnesota 55092

Re: City of Wyoming
New Public Safety Facility
Commission No. 212157

Dear Robb:

After a positive response from the recent Council Budget Work Session we are providing this proposal to follow-up on our previous proposal from May this year. As indicated in that letter and discussed throughout the process of our initial Schematic Design efforts we have developed a concept plan and budget that gives us the breadth of information needed to continue our design efforts. Based on feedback from council and the core planning group, we are proposing to continue our full design services on the New Public Safety Facility.

As previously indicated, we consistently propose fixed fees of 6% for new construction; based on your approved building construction cost (less site cost as that portion would be designed by WSB). This results in the following calculation, with full credit for the previously completed Schematic Design efforts:

Construction Cost Estimate	$11,180,000
Half of Construction Contingency	$ 279,500
Total Construction Budget	$11,459,500
Less Site Costs	($ 935,000)
Building Construction Budget	$10,524,500
Full Service Fixed Fee Rate	x 6.0%
Total Full Service Fixed Fee	$ 631,470

To date we have billed and received $81,450 for a portion of the Schematic Design fees. As we discussed the City is interested in taking the project, with the revised budget, through Design Development. Per our Contract and typical AIA agreements, Schematic Design and Design Development constitute 35% of the overall fee. An updated fee calculation for this is as follows:

Full Service Fixed Fee Rate	$ 631,470
SD & DD Percentage	x 35%
Total Fee Through DD	$ 221,000
Previously Billed SD Efforts	($ 81,450)
Remaining Fixed Fee Through DD	$ 139,550

Wold Architects and Engineers
332 Minnesota Street, Suite W2000
Saint Paul, MN 55101
woldae.com | 651 227 7773

PLANNERS
ARCHITECTS
ENGINEERS

Reimbursable Expenses are in addition to compensation for Basic and Supplemental Basic Services and include expenses incurred by the Architect's consultants directly related to the Project, such as mileage, printing, communication costs, etc. We have found that reimbursable expenses typically do not exceed $3,000 per million of construction cost on a project of this size. Therefore, we propose to invoice reimbursable expenses at actual cost with a maximum amount capped at $31,500 resulting in a **total contract amount of $171,000** to complete Design Development for the Public Safety Facility.

Based on feedback from the most recent Council Work Session, the design efforts and schedule for the City Hall and Public Works projects will be reviewed again this Spring as the Public Safety Facility nears or completes bidding.

As stated in our previous proposal, Wold Architects and Engineers has full Interior Design and Audio/Visual Systems Design capability, and can provide these services needed to design, procure and administer implementation of these building elements upon request. Our fixed fee approach is the same, and we would use the value of the furnishings or equipment that we are responsible for to calculate the fee based on a percentage of that.

We're excited to continue our design for the New Public Safety Facility, and look forward to making this extremely important project for the Wyoming community a reality. Please let me know if I can provide any additional information, and thank you for the opportunity to help make a difference!

Sincerely,

Wold Architects and Engineers

Jonathan Loose | P.E., LEED AP
Partner

cc: Michael Klass, Wold
Michelle Kruta, Wold

JGL/CI_Wyoming/212157/crsp/dec21

RESOLUTION NO. 22-01-10

A RESOLUTION APPROVING WOLD ARCHITECTURE TO COMPLETE DESIGN DEVELOPOMENT FOR A PUBLIC SAFETY FACILITY IN THE AMOUNT OF $171,000

WHEREAS, there is interest in pursuing the next steps in planning for the future facilities in the City of Wyoming. As the recommendations presented to the Council begin to mark the conclusion of creating a design development for a public safety building

WHEREAS, the proposal is to perform full architectural consulting services for the proposed New Public Safety Facility on an existing city owned site as presented to the City Council

WHEREAS, based on feedback from the city council, there is interest in understanding the potential costs for starting on the design development

THEREFORE BE IT RESOLVED, the City of Wyoming authorizes the Schematic Design for a Public Safety Facility to be completed by Wold Architects in the amount of $171,000

HEREUPON SAID RESOLUTION WAS DECLARED DULY PASSED AND ADOPTED THIS 4th OF JANUARY, 2022.

CITY OF WYOMING

By:_____
Lisa Iverson, Mayor

ATTEST:

_____
Robb Linwood, City Administrator/Clerk